ASSEMBLY INSTRUCTIONS

01/19
EU011

Warning –
CHOKING HAZARD – Small Parts Not for children under 3 years. Adult assembly required.

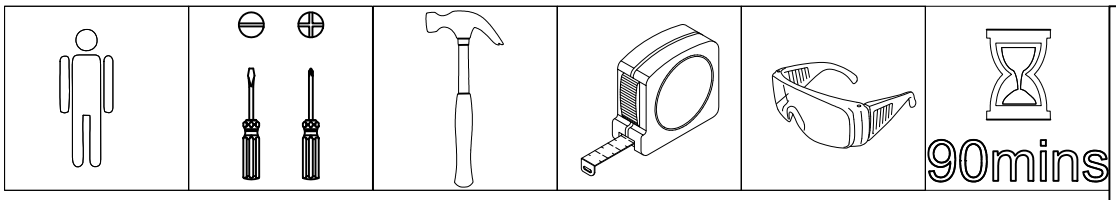

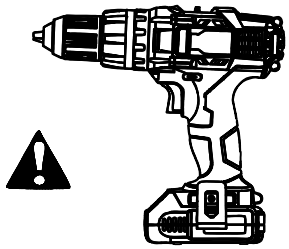

Although not required, it is recommended that a drill be used to help ease the assembly process, as some holes are not pre–drilled.

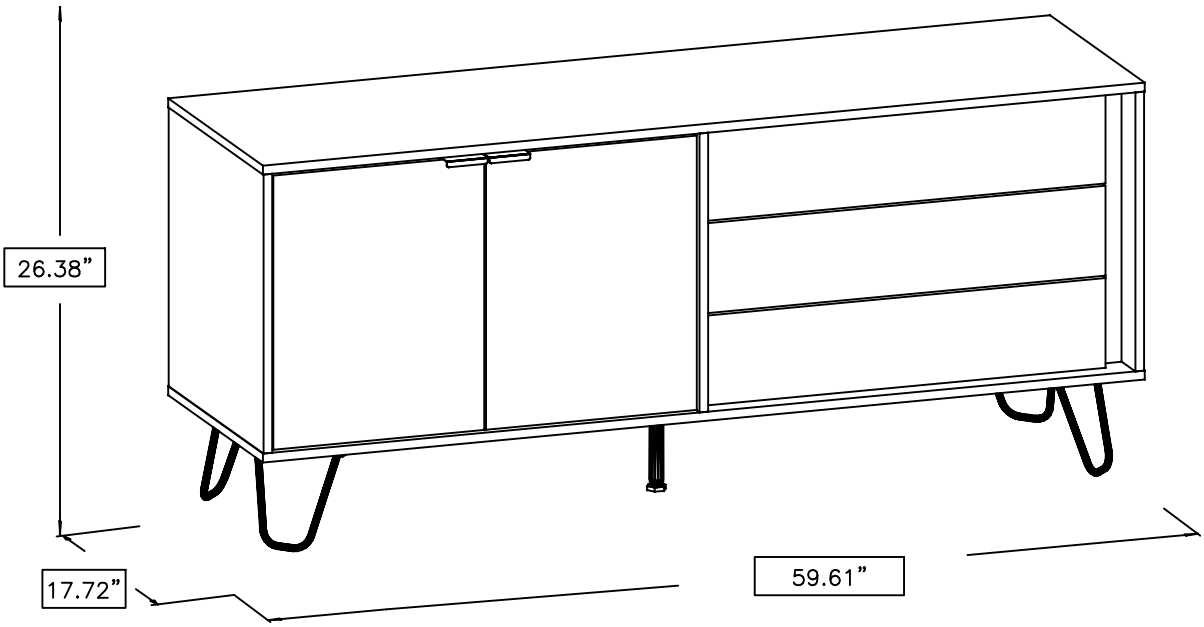

Part Identification

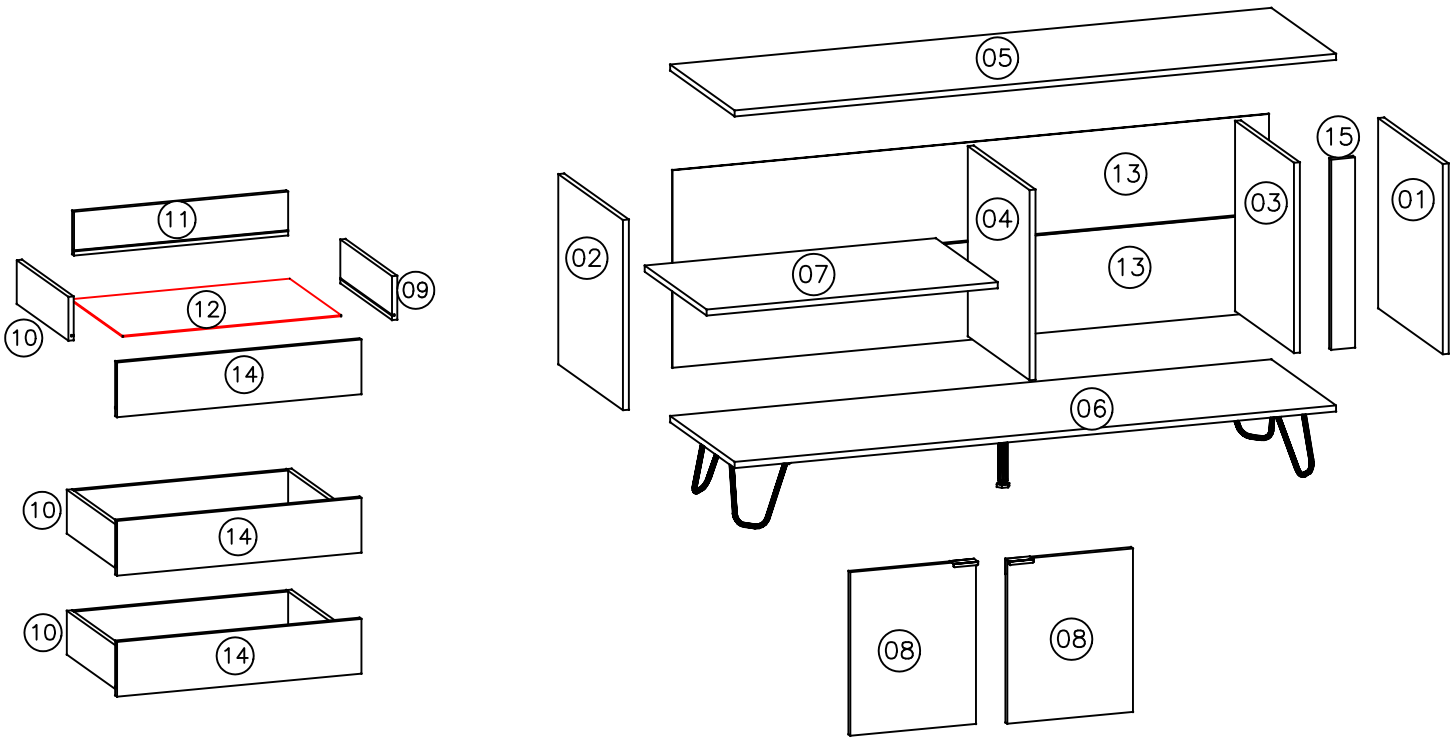

List of pieces

Code	Description	Amount	Length (in.)	Width (in.)	Thickness (in.)	Box
01	Right side	1	18.35”	17.60”	.59”	A
02	Left side	1	18.35”	17.60”	.59”	A
03	Right partition	1	18.35”	16.06”	.59”	A
04	Left partition	1	18.35”	17.60”	.59”	A
05	Top	1	59.61”	17.60”	.59”	A
06	Base panel	1	59.61”	17.60”	.59”	A
07	Shelf	1	28.86”	16.85”	.59”	A
08	Doors	2	18.03”	14.25”	.59”	A
09	Right drawer side	3	15.75”	4.72”	.59”	A
10	Left drawer side	3	15.75”	4.72”	.59”	A
11	Back drawer	3	23.74”	4.72”	.59”	A
12	Bottom drawer	3	24.25”	15.67”	.12”	A
13	Back panel	2	59.13”	9.45”	.12”	A
14	Front drawer	3	27.09”	5.91”	.59”	A
15	Upper slat	1	18.35”	2.36”	.59”	A

Prior to assembly, please ensure that all the Panels listed below are complete. If any pieces are missing or damages, please contact us directly at our Email CS@K1intlgrp.com or Toll-free 1-877-250-2820

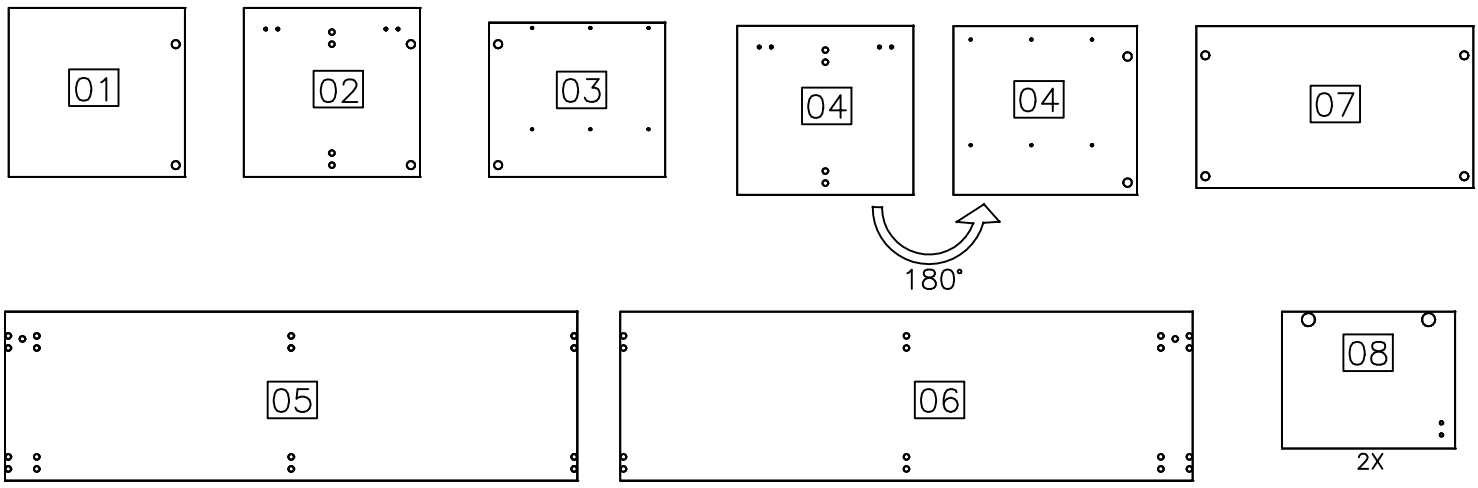

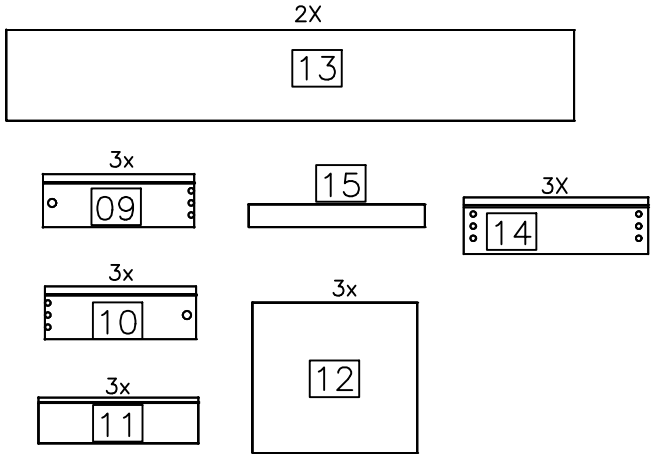

It is recommended the use of the box in which your furniture arrived in, be opened, and laid out on the floor as your work area. This helps prevent an unnecessary damages from occurring.

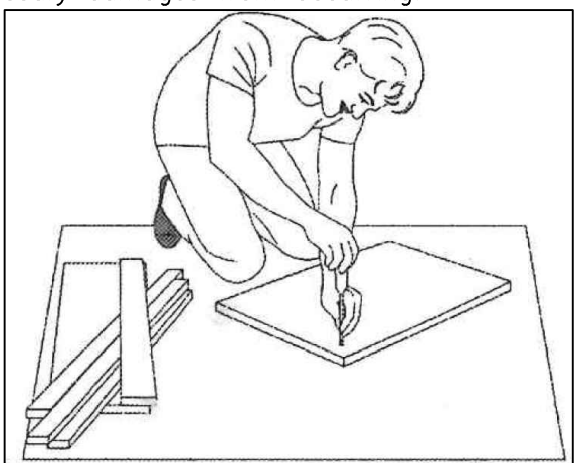

TO SCALE

Hardware

	Code	Description	Amou.
A	30945	Cam Screws	18
B	30950	Cam Locks	18
C	226	Screw 4x40	14
D	1802	Dowel 6x30mm	46
E	5256	Screw 4,0x20	12
F	4214	Screw 3,5x14	40
G	107	Nail 10x10	40

Anti–tipping installation

H	55606	Mounting bracket	2
I	55607	Clamp	1
J	51980	Screw 4,5x50	2
K	1178	Parafuso/ Tornillo/ Screw 3,5x16 BC	26
L	32069	Adapter sleeve	2

0 1 2 3 4 5 6 7 8 9 10 11 12 13 14 15 16 17 18

NOT TO SCALE

M	43136	Metal slide 350mm	3
N	EBPR1=39999 (Preto Fosco) LAGI=45054 (Champagne)	Handle 70mm	2
O	LAGI1=55598 (Champagne) EBPR1=55600 (Preto fosco)	Metal foot tube	4
P	LAGI1=55302 (Champagne) EBPR1=47696 (Preto fosco)	Central foot	1
Q	LAGI1=31256 (Larnaca) EBPR1=50493 (Ébano Grigio)	Screw cap cover 19mm	18
R	LAGI1=9396 (Larnaca) EBPR1=9399 (Ébano Grigio)	Screw cap cover 13mm	14
S	18458	Black triangular support	12
T	LAGI1=56211 (Carvalle) EBPR1=55882 (Preto)	Perfil H/Perfil de acabado/Fini shing profile 1482mm	1

U	05123	Hinge 35mm	4
V	05123	Shim	4
W	05123	Hinge screw4,0x14	16

01 Saco médio para acessórios (Internal production data)
01 Saco médio para puxador (Internal production data)

1A Drawer Preassembly

This process is repeated three times

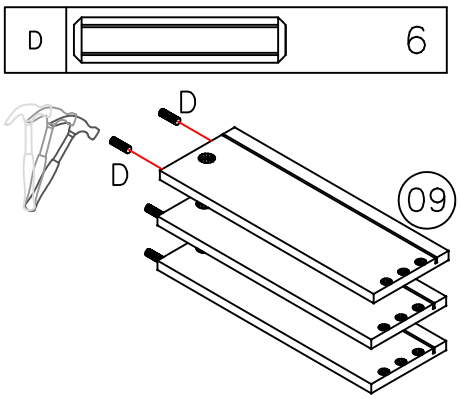

1B Drawer Preassembly

This process is repeated three times

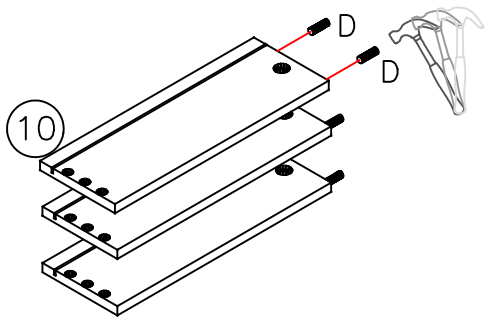

1C Drawer Preassembly

This process is repeated six times

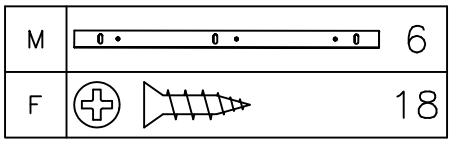

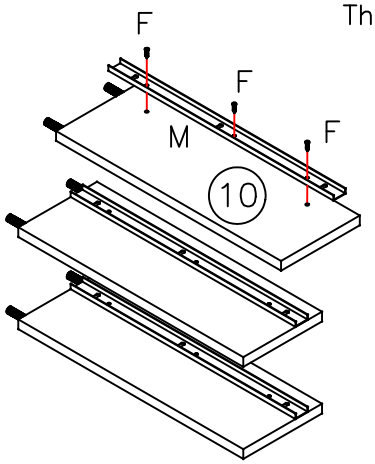

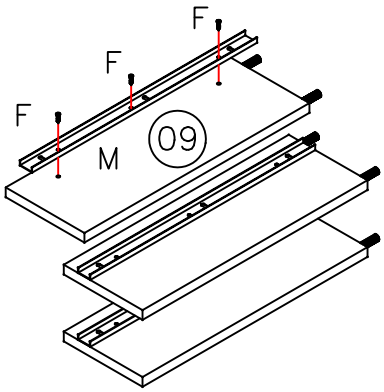

Correct position of the screws "F"

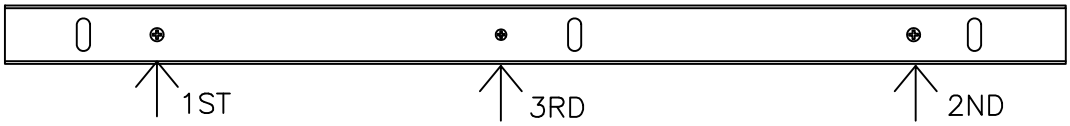

To adjust the height of the drawer, the "F" screw must be placed in the oval horizontal spacing of the "M" rail

1ST

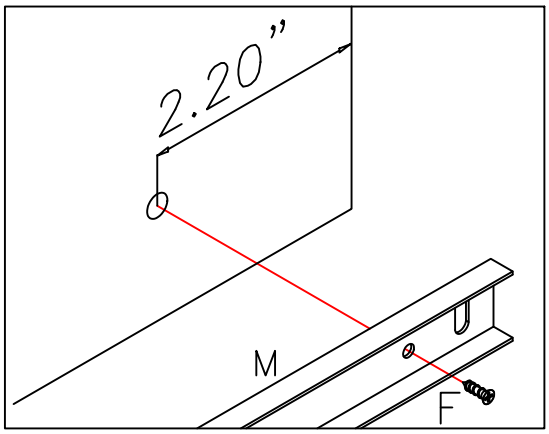

2ND

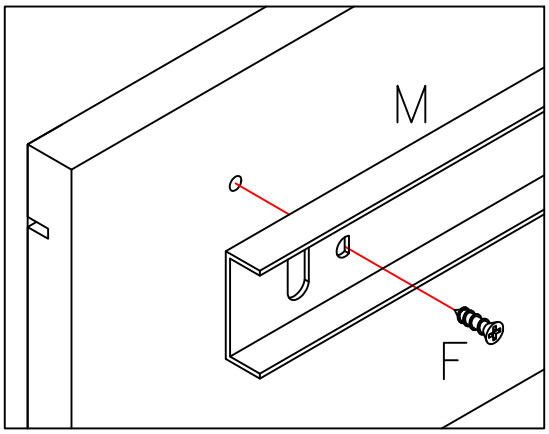

3RD

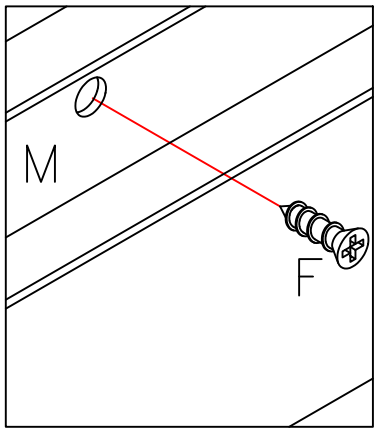

Use the indent as a guide for installing the rails

1D Drawer Preassembly

This process is repeated three times

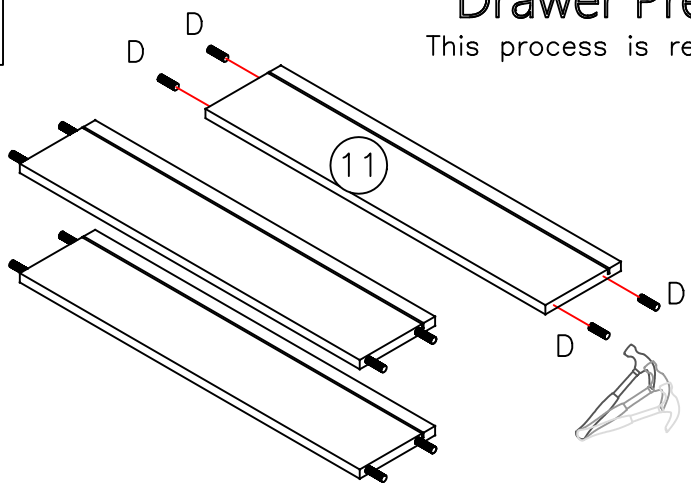

D		12

2 Drawers Mounting

This process is repeated three times

C		6
R		6

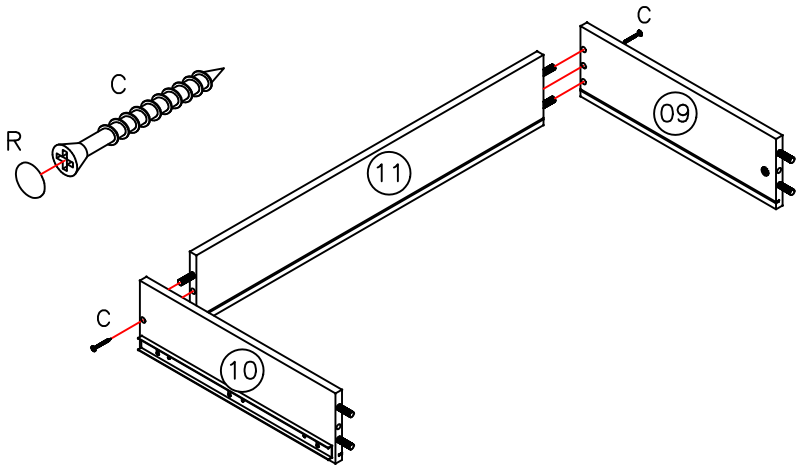

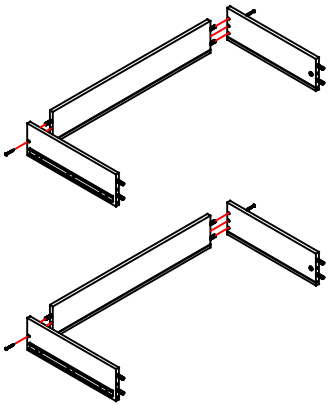

3 Drawer Assembly

This process is repeated three times

A		6

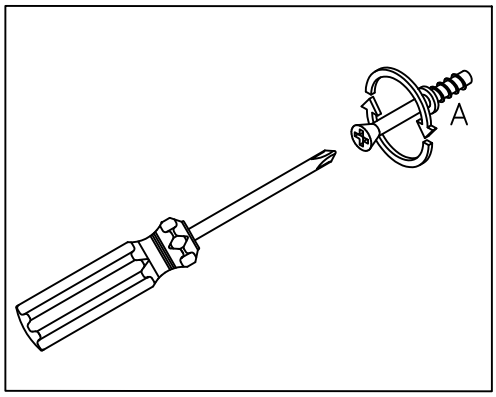

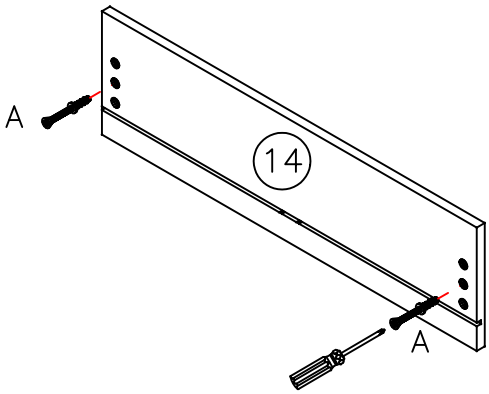

4 Drawers Mounting

This process is repeated three times

B		6
Q		6

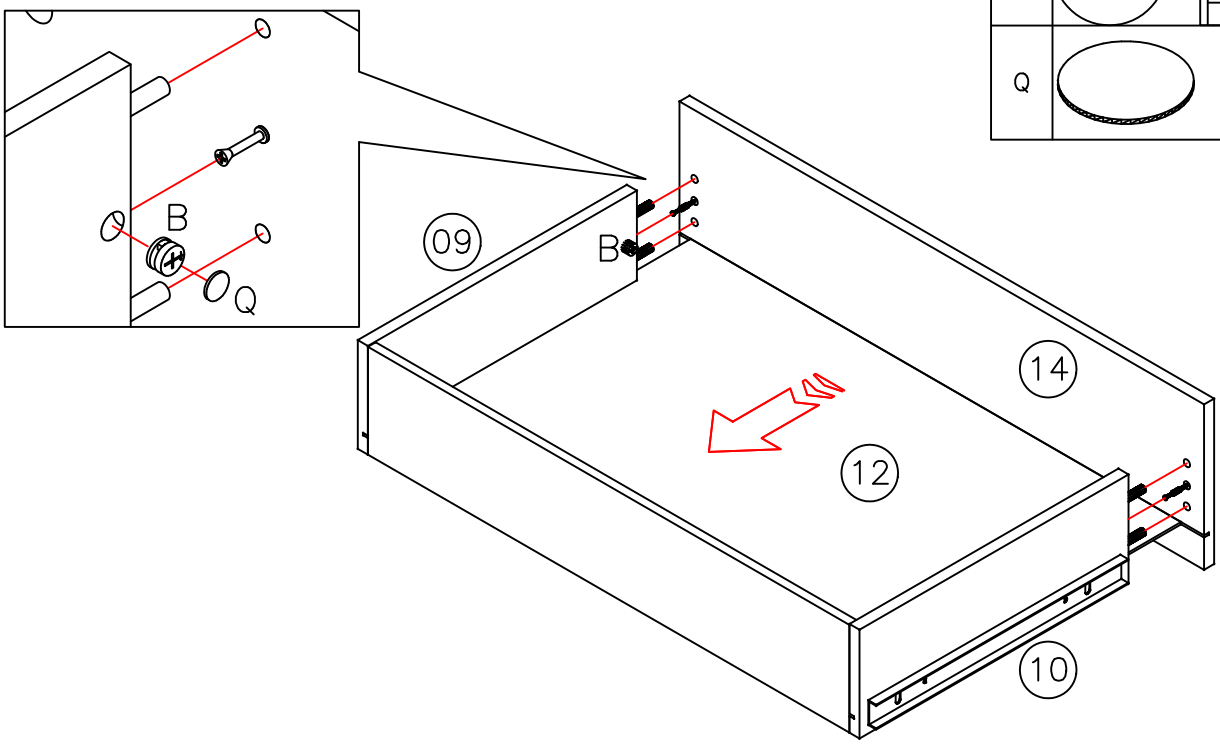

5 Drawer final assembly

This process is repeated three times

E		12
S		12

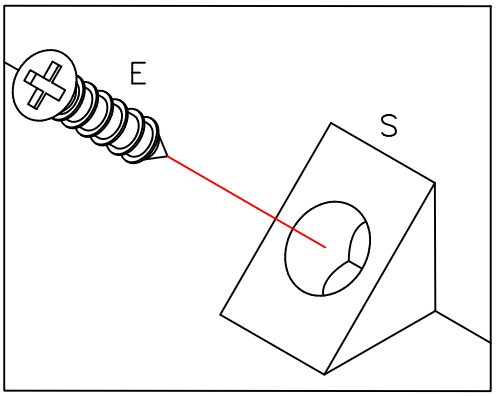

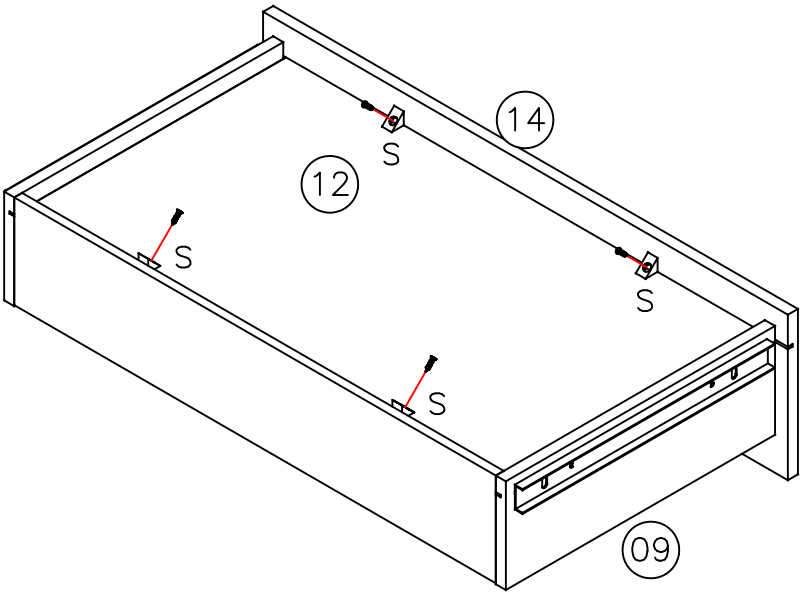

If you have any further questions regarding the assembly of the drawer, access the website through the QR CODE

6 Preassembly of parts

D		22

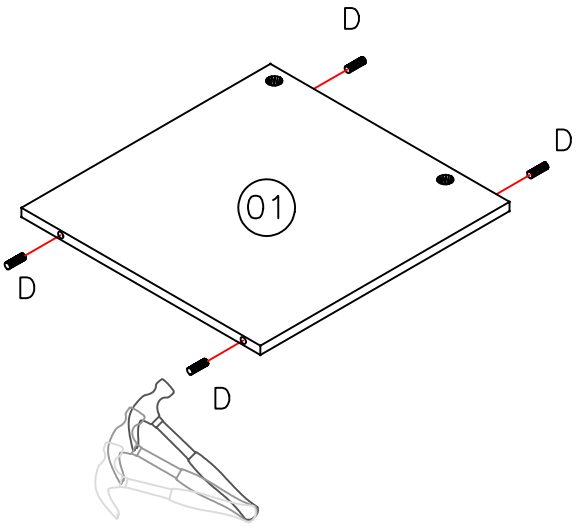

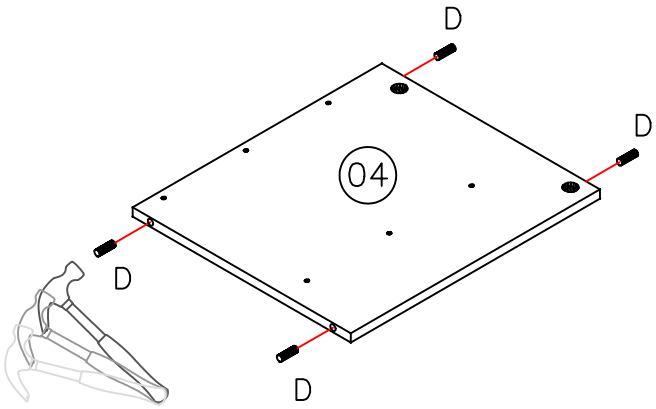

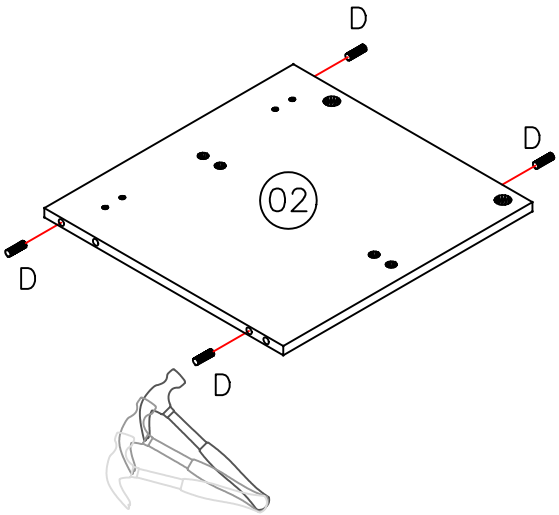

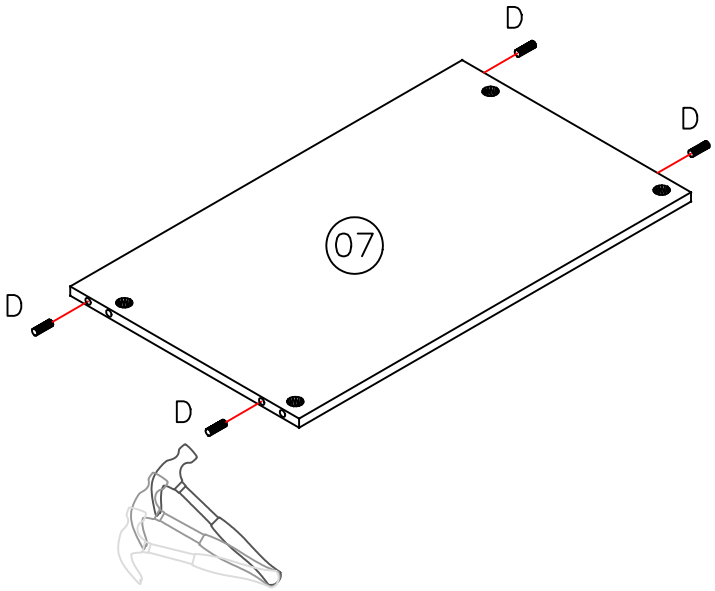

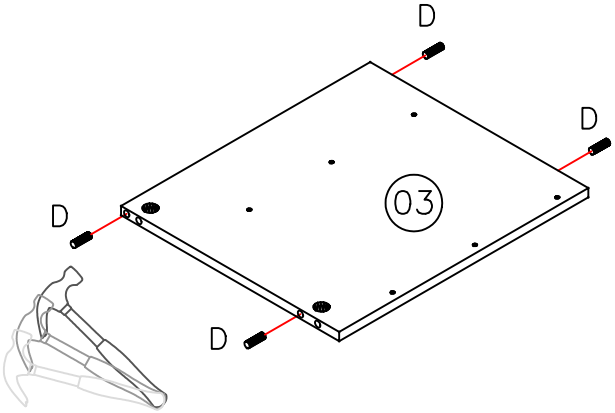

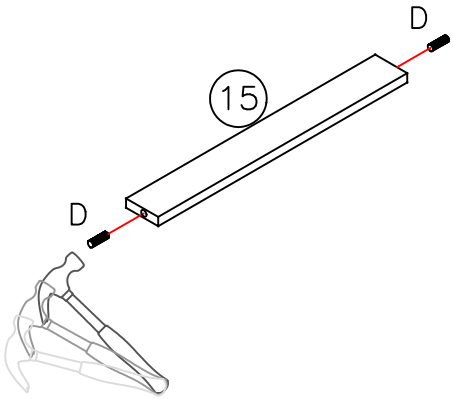

7 Preassembly of parts

A		12

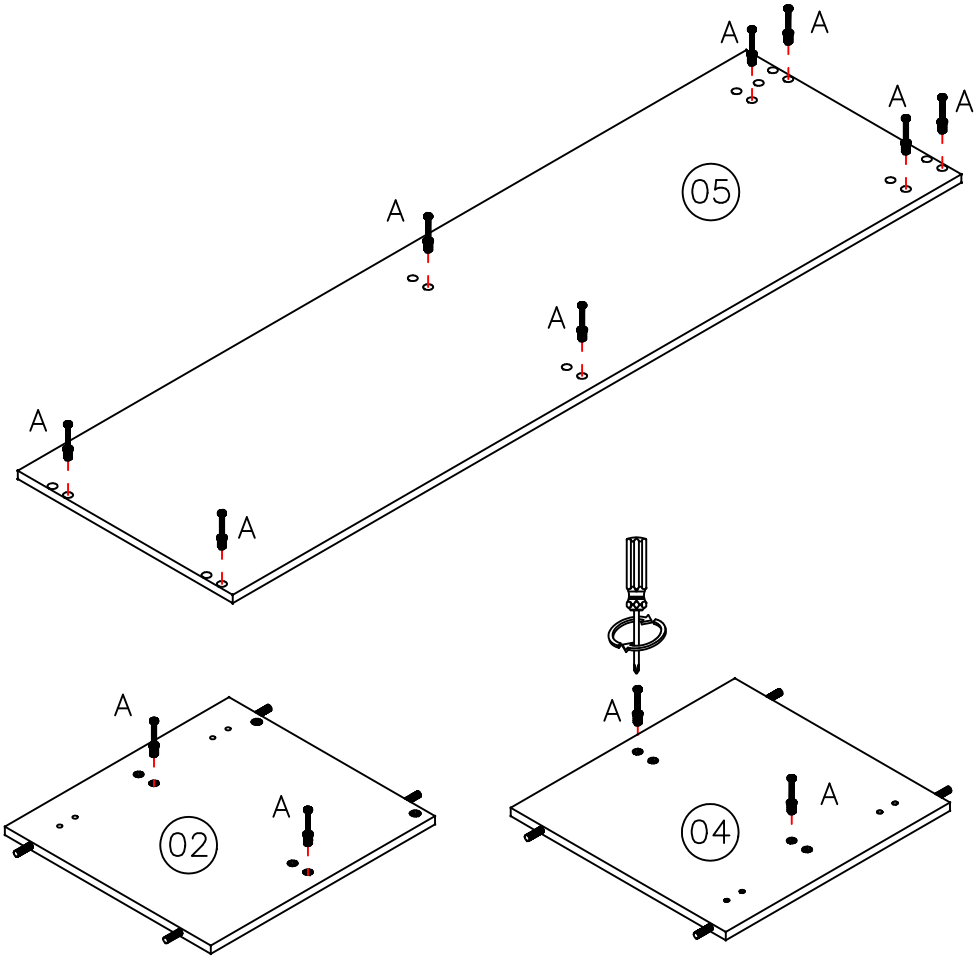

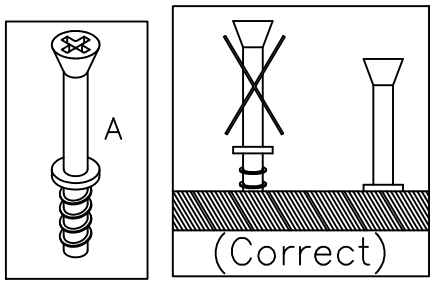

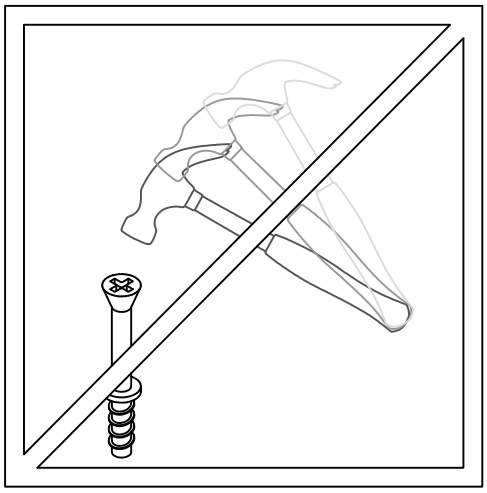

8

V		4
W		8

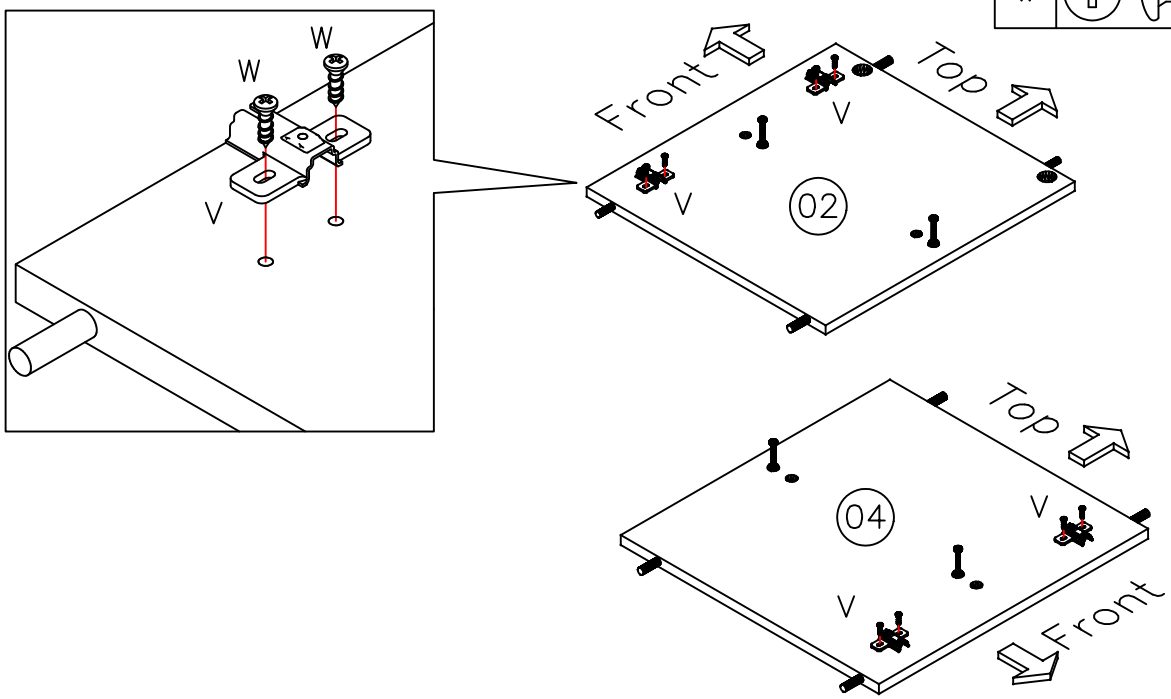

9

F		18
M		6

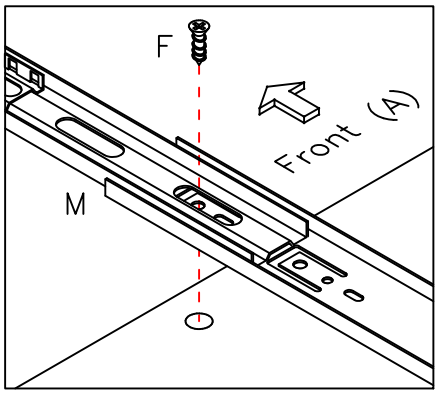

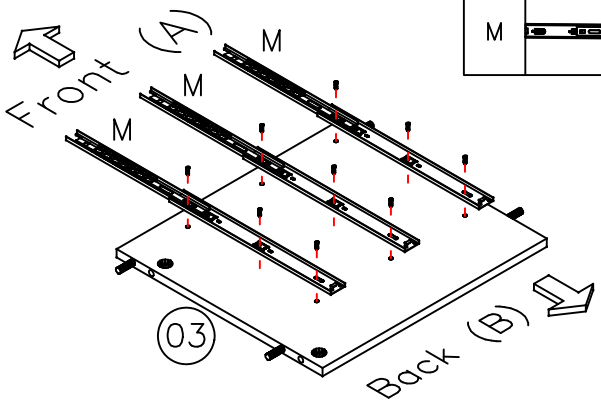

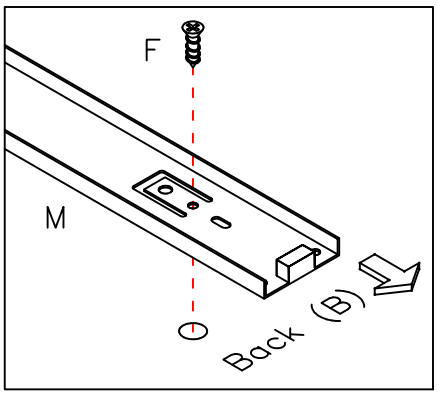

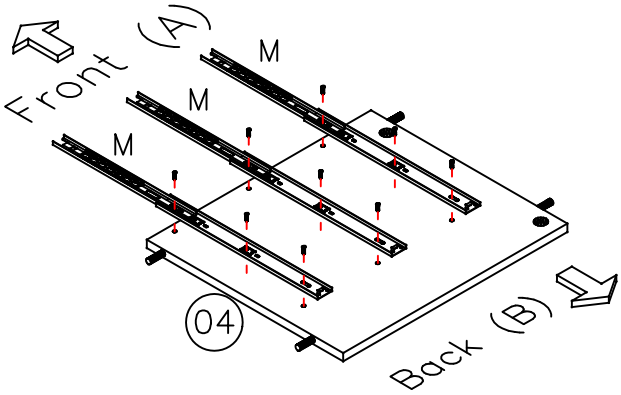

10

F		4	U		4
N		2	W		8

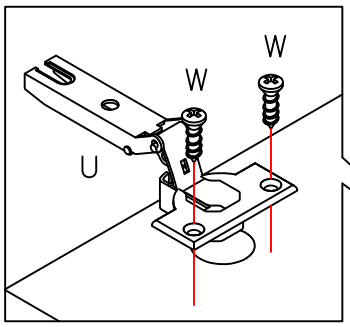

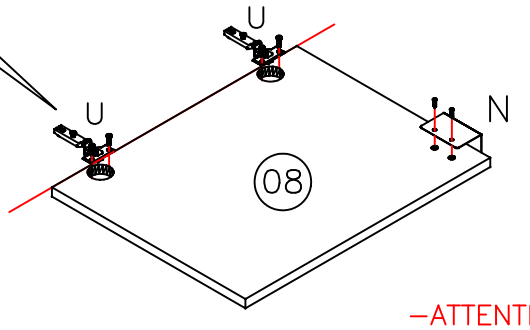

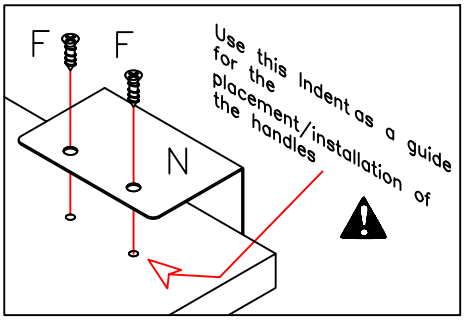

—ATTENTION TO THE ALIGNMENT OF THE HINGES

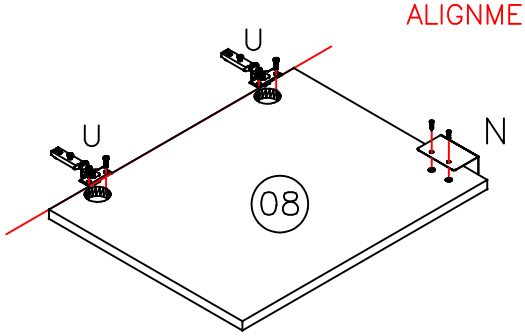

EU011

11

B	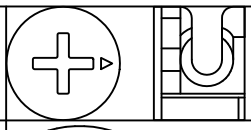	4
Q	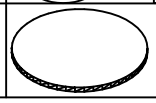	4

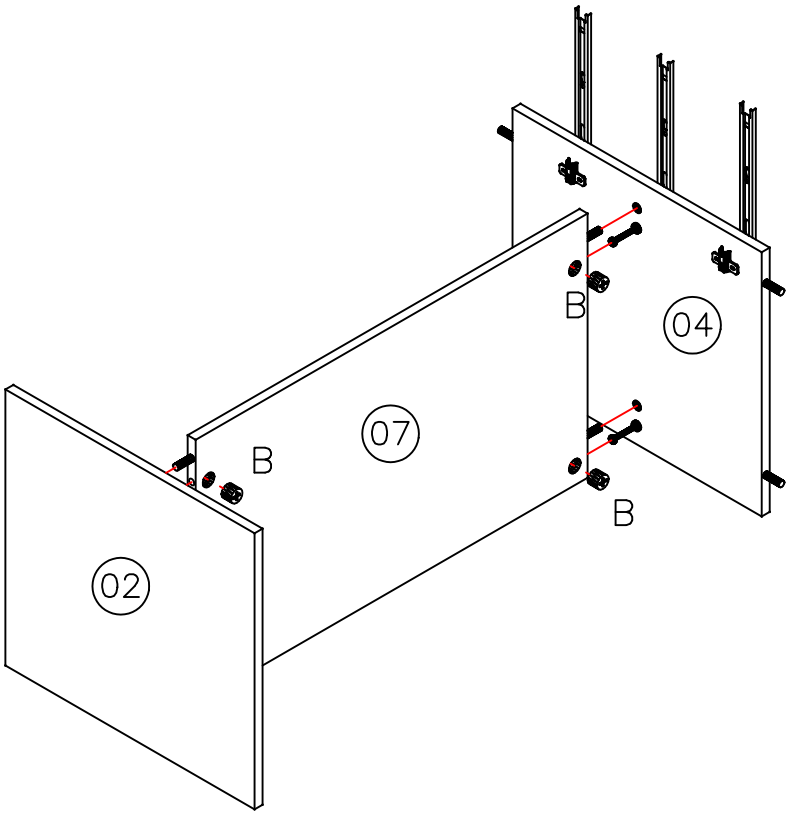

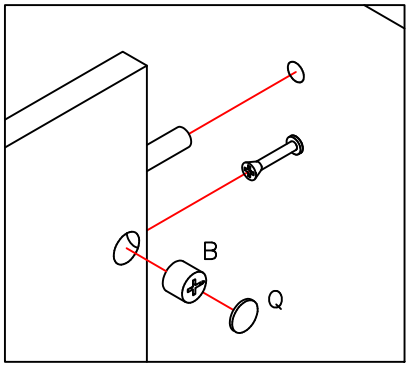

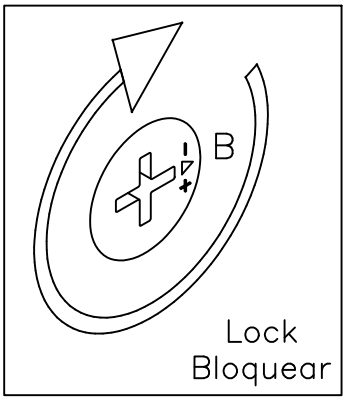

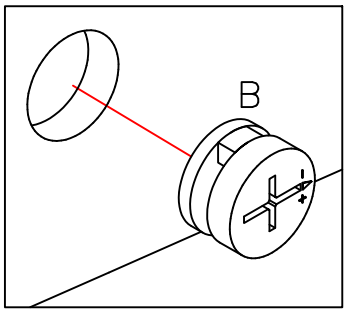

EU011

12

B	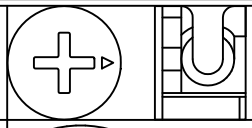	8
Q	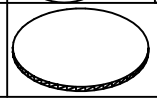	8

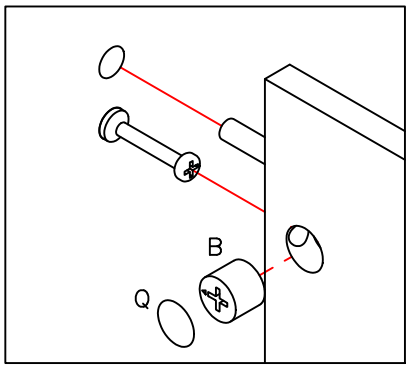

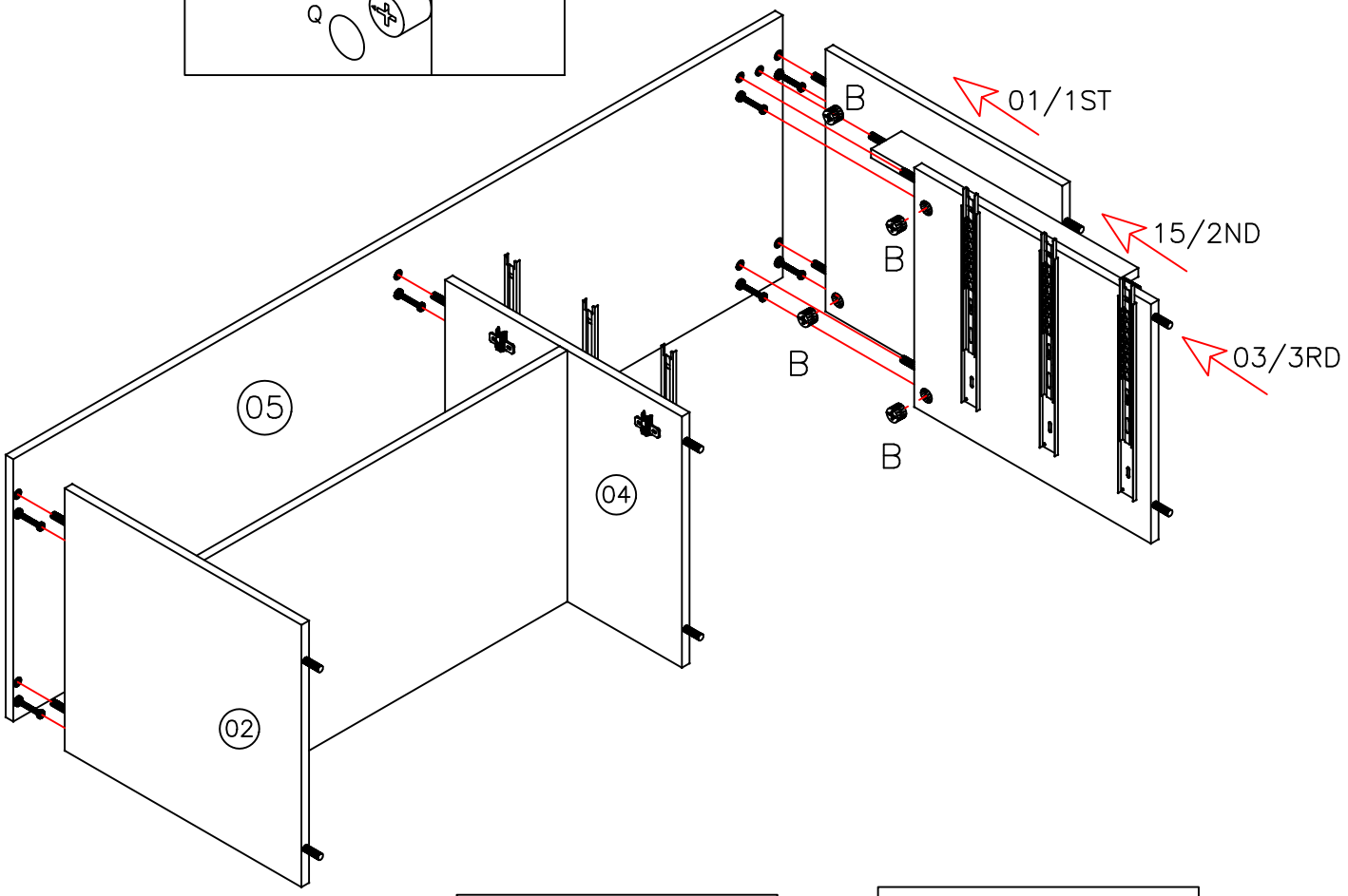

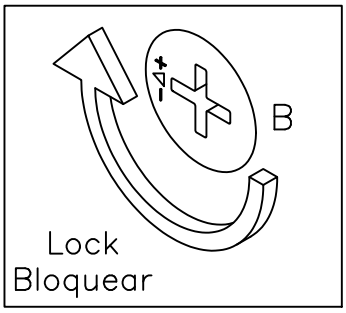

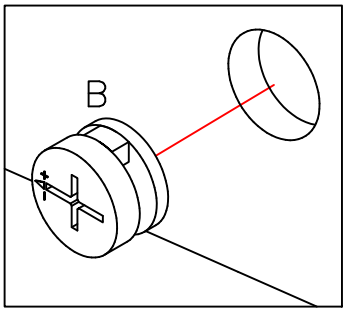

13

C		8
R		8

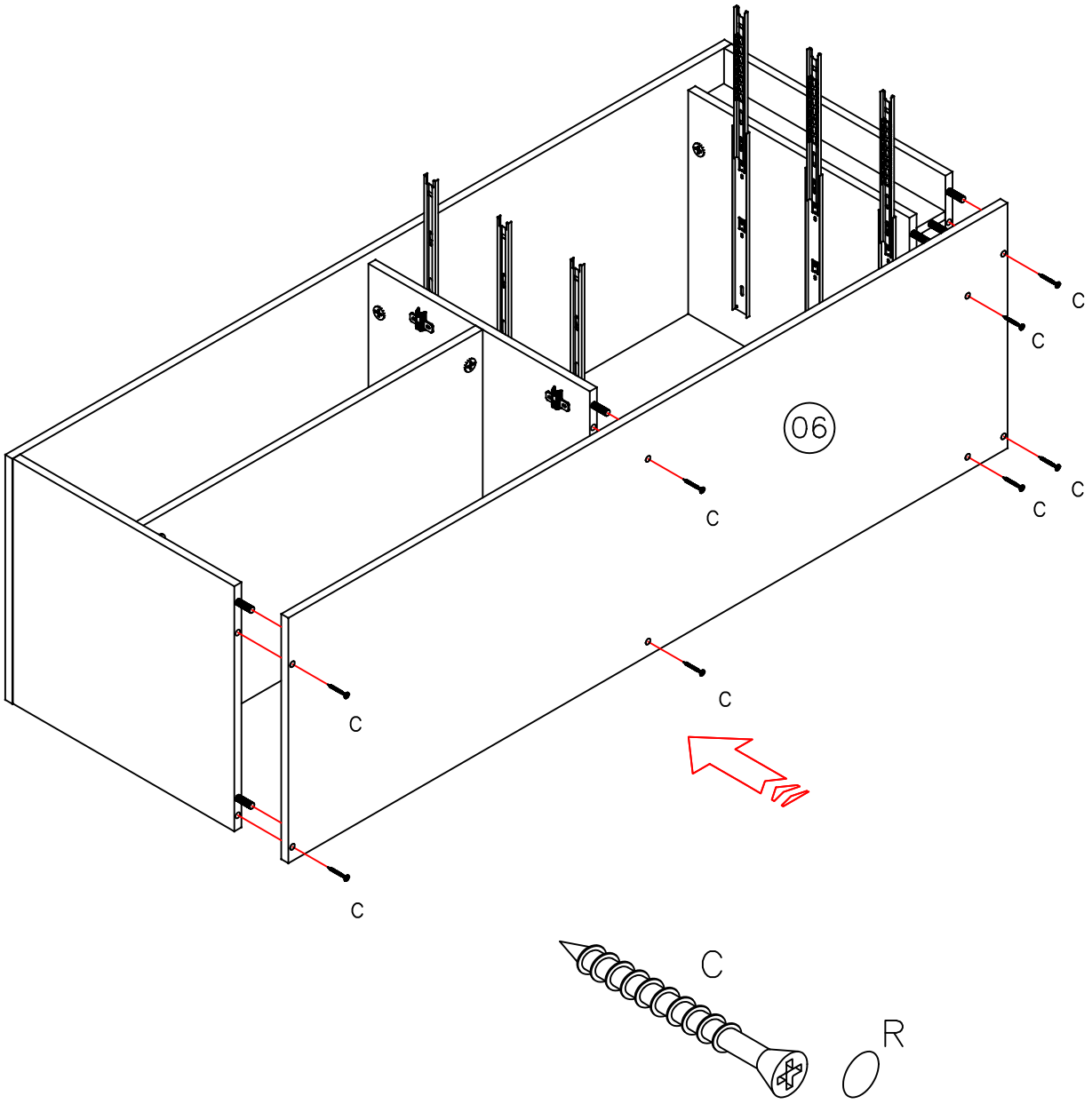

14

K		24
O		4
P		1

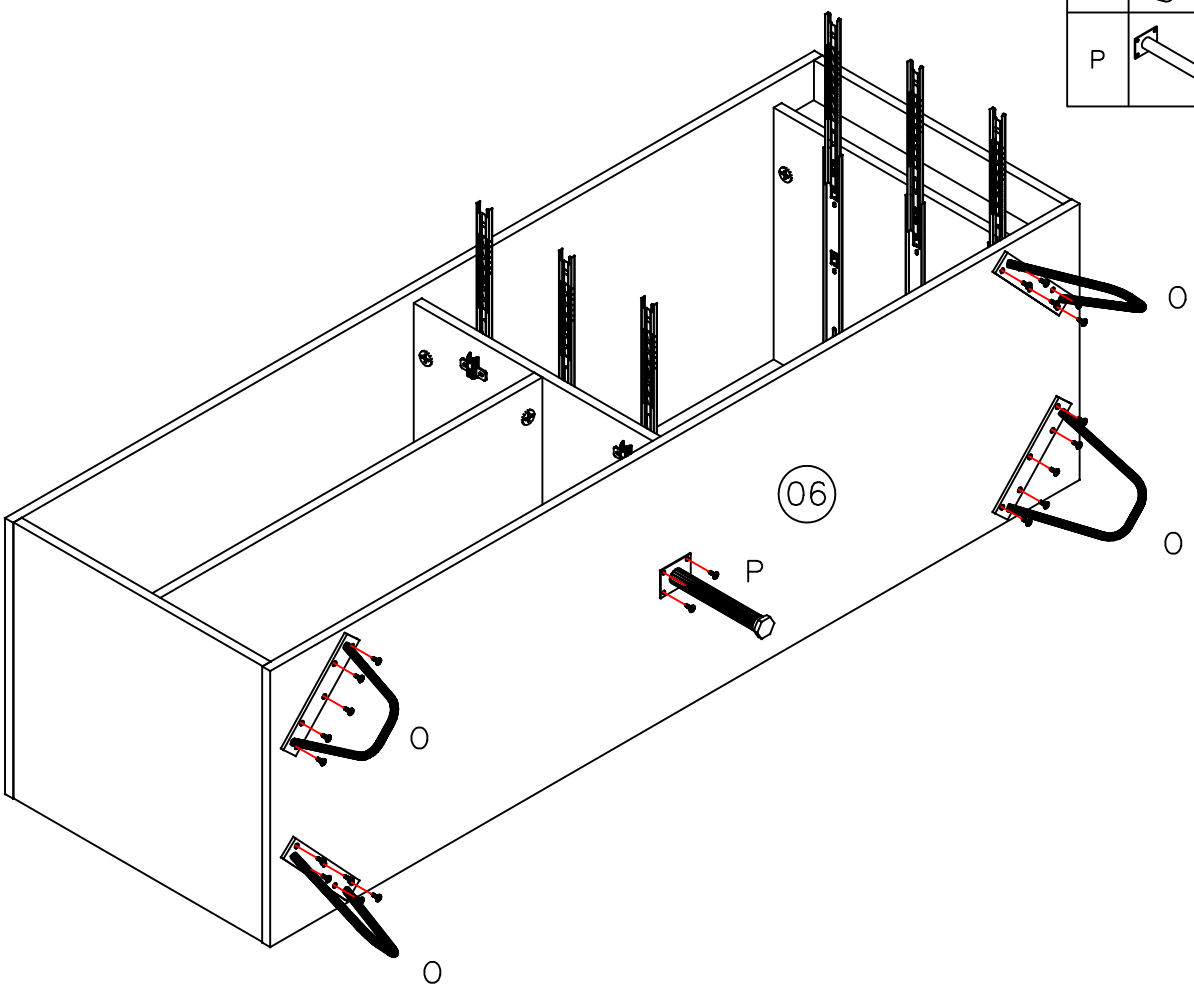

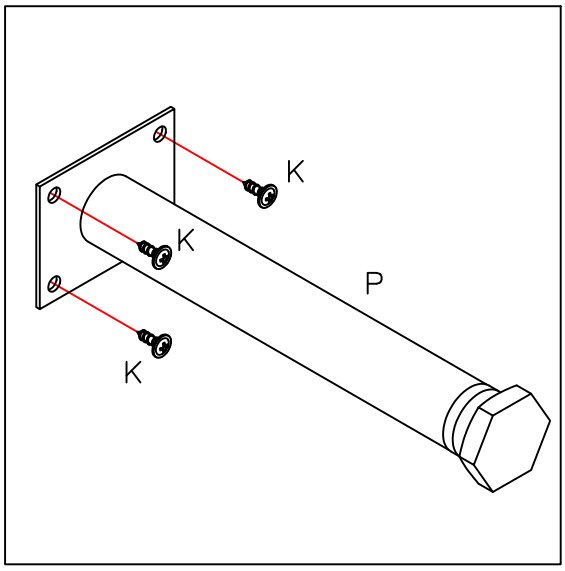

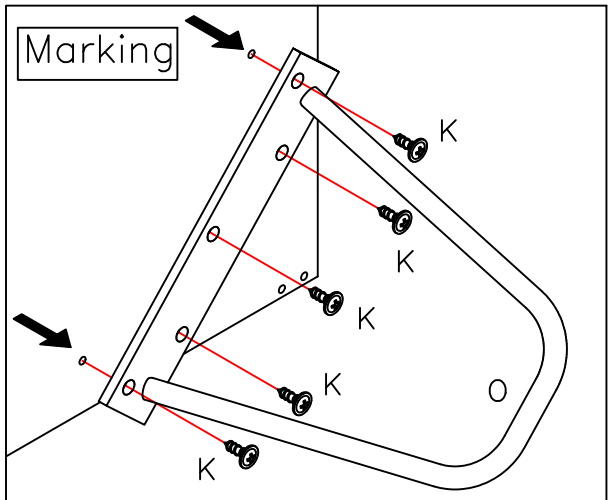

* TO FIX THE FEET, USE THE MARKING CONTAINED IN THE BASE.
(IMAGE ILLUSTRATING ABOVE)

15

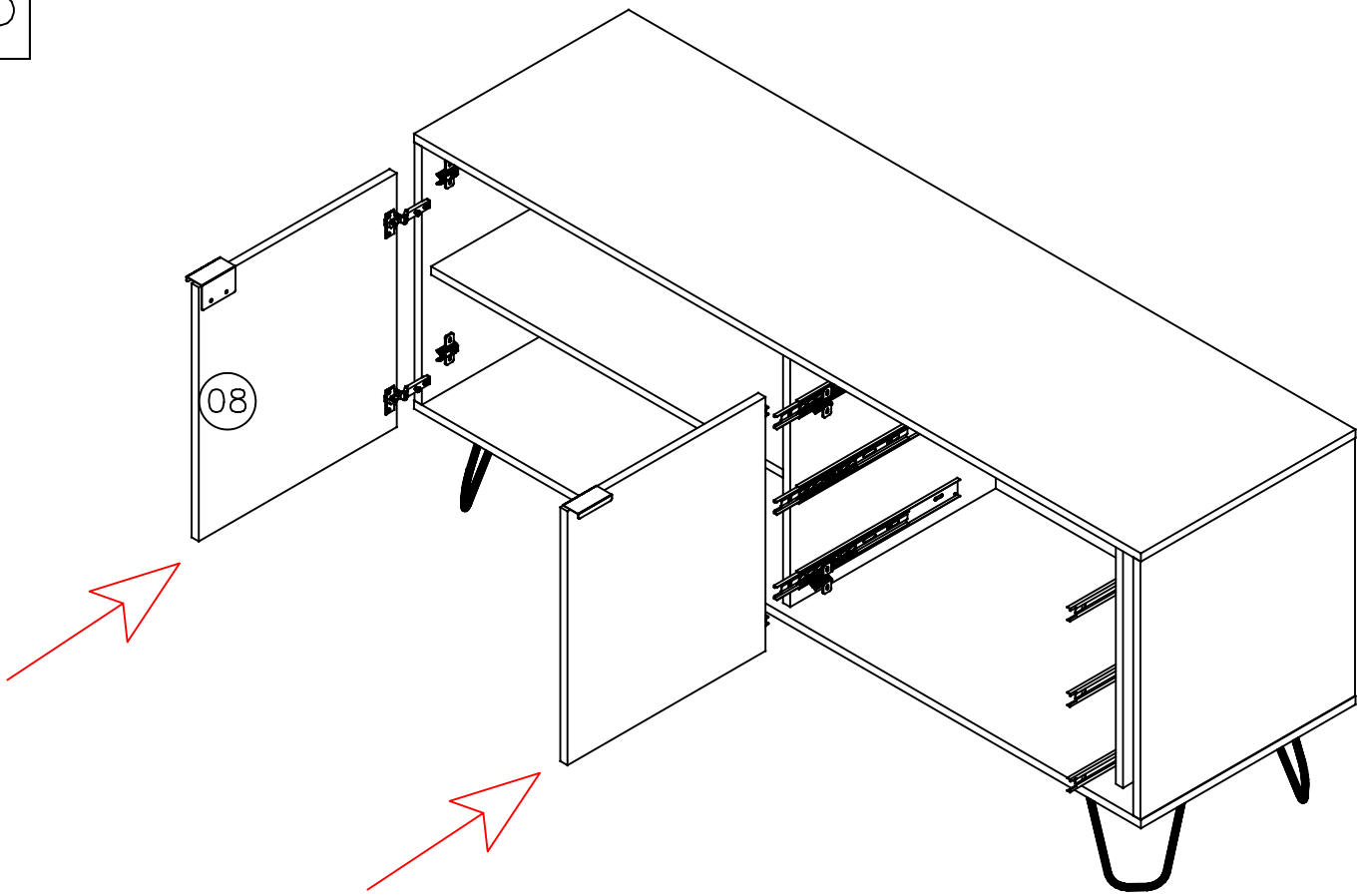

Door Setting

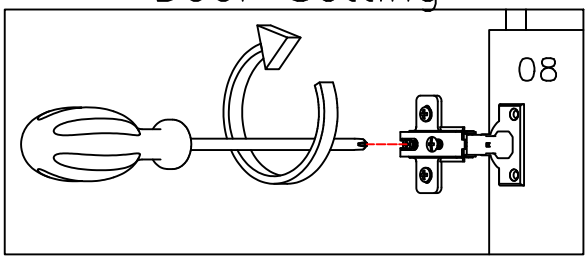

Height Adjustment

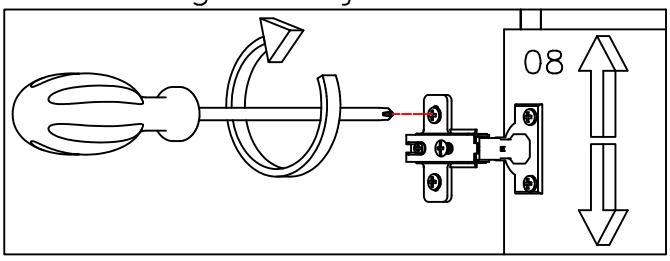

Internal Adjustment

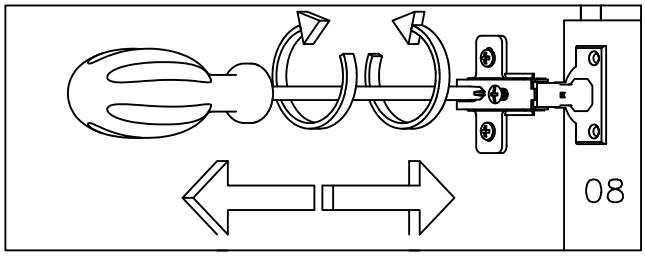

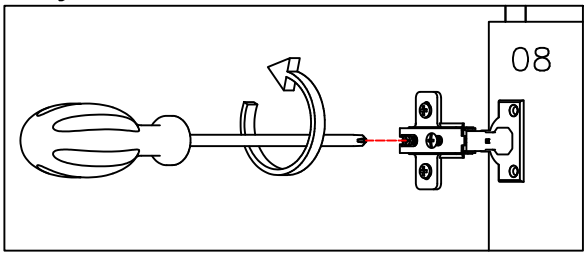

Depth Adjustment

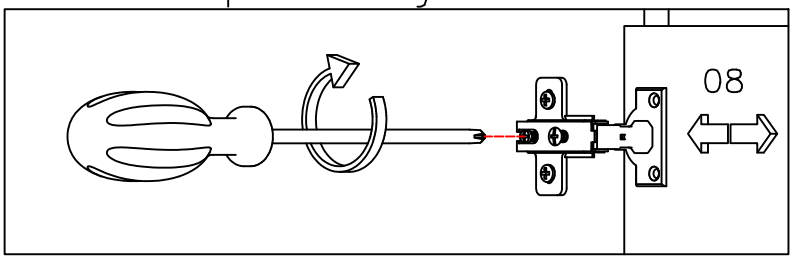

16

G	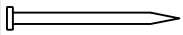	40
T	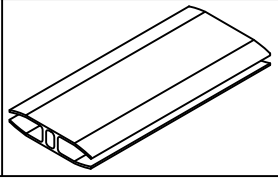	1

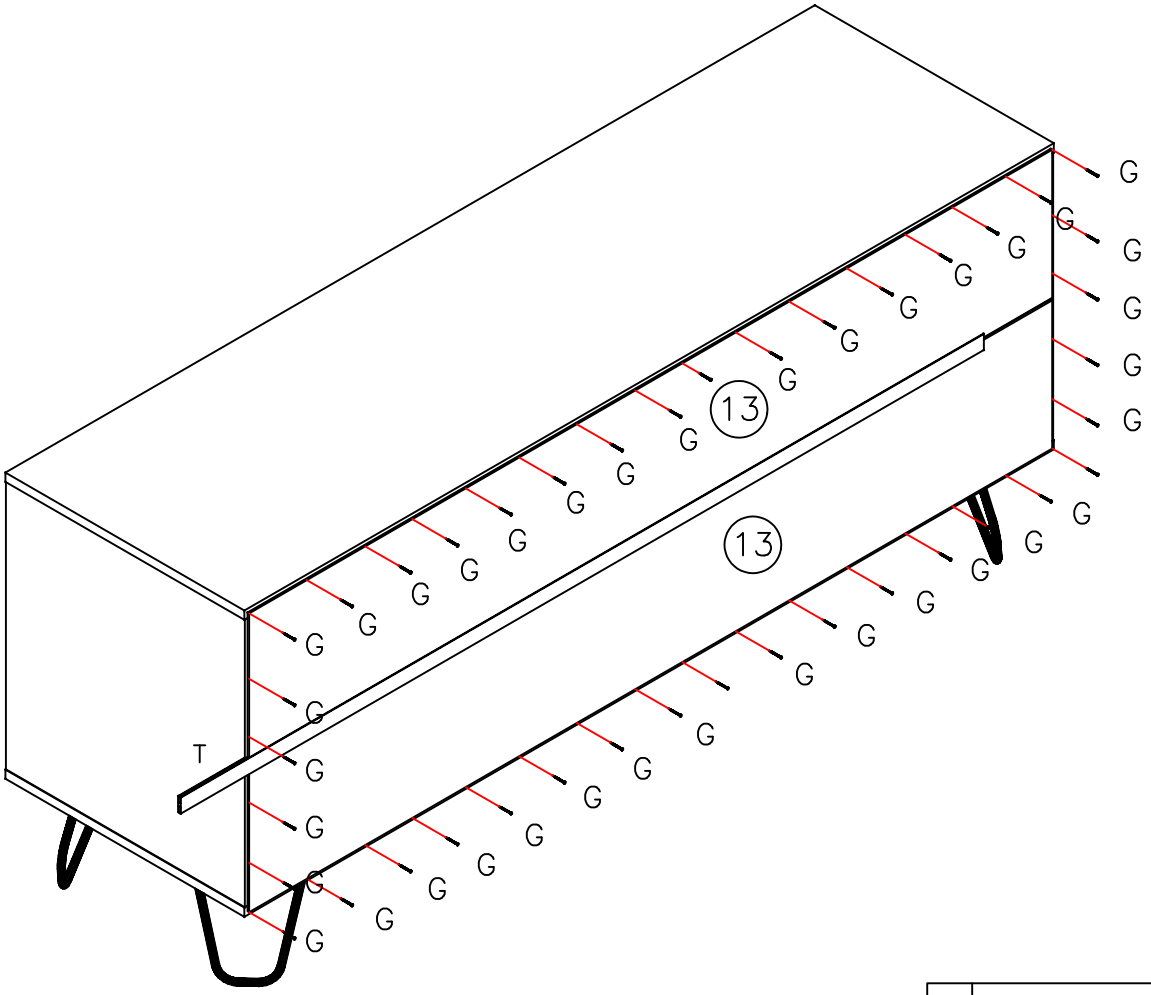

H profile placement procedure

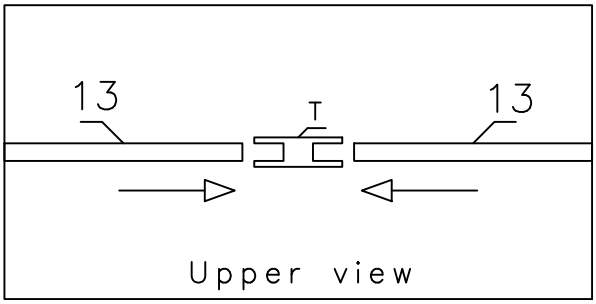

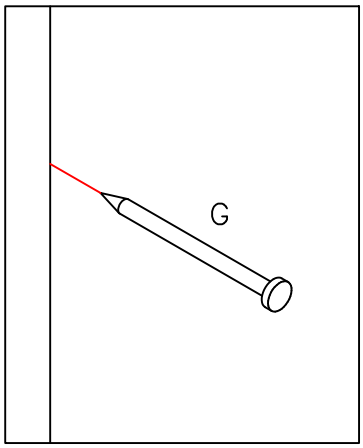

17 NOTE: Do not turn the DRYWALL ANCHOR into a wall stud. If you prefer to fasten the SAFETY ANTI–TIPPING to a wall stud, go to your local hardware store for proper hardware.

Compress the wings of anchor before inserting.

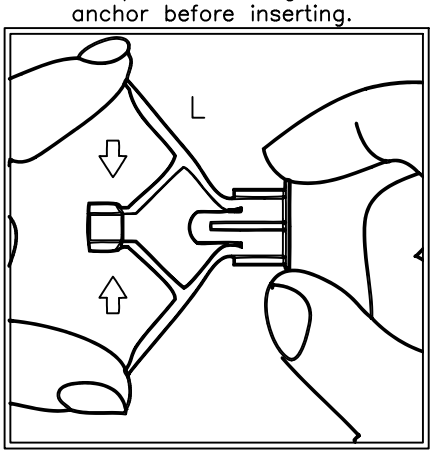

Insert the chuck into the hole of the base material.

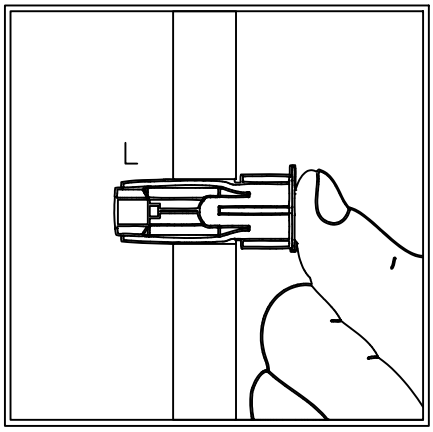

Position the object over the bushing and secure it with a screw.

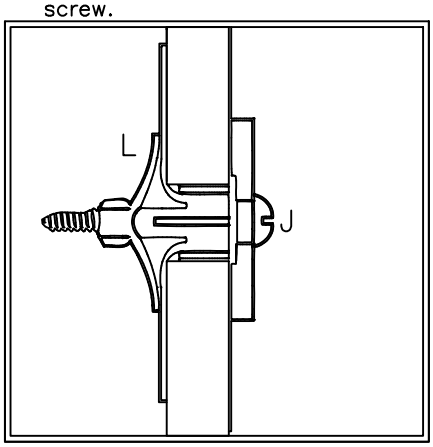

Anti–tipping installation		
H	Mounting bracket	2
I	Clamp	1
J	Screw 4,5x50	2
K	Screw 3,5x16 BC	2
L	Anchor	2

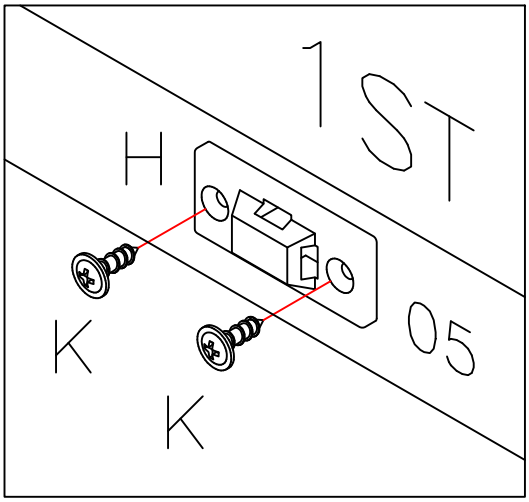

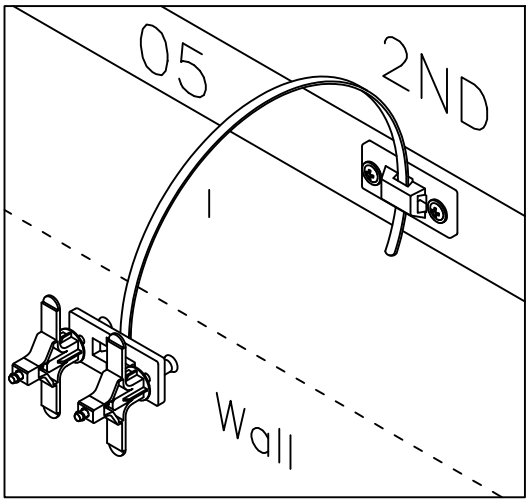

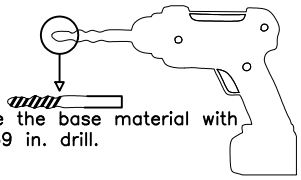

Pierce the base material with a 0.39 in. drill.

Important
- The minimum length of the screw must be the bushing length + object thickness that will be fixed.
- To guarantee the wing expansion function of the bushing, after the screw head is at the object to be fixed, one must continue to rotate the screw until maximum torque is reached.

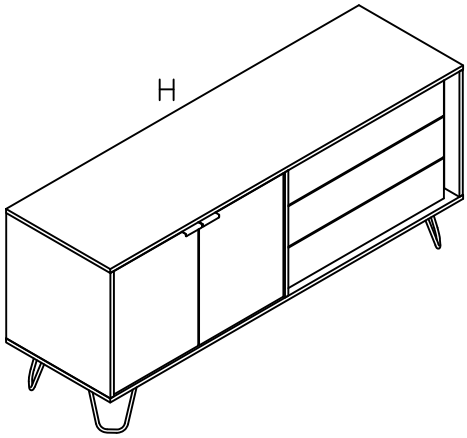

A WARNING –Anti–Tip Advisory

Potential of serious fatal crushing injuries may occur from furniture tip–over. To help prevent tip–over:

ALWAYS INSTALL the tip–over restrain that came with your furniture. This tip–over restrains only reduces but does NOT completely eliminate the risk of tip–over

- ALWAYS Place the heaviest items in the lowest/bottom drawer.
- NEVER place TV's or other heavy objects on top of this product.
- NEVER allow children to scale/climb/hang on the drawers, doors, or shelves.
- NEVER open more than one drawer at a time.

B ADVERTENCIA – Aviso antivuelco

Pueden producirse lesiones graves por aplastamiento mortales debido al vuelco de los muebles. Para ayudar a prevenir vuelcos:

- SIEMPRE INSTALE el sistema de retención que viene con sus muebles. Este sistema antivuelco solo reduce pero NO elimina por completo el riesgo de vuelco.
- SIEMPRE coloque los artículos más pesados en el cajón más bajo /inferior.
- NUNCA coloque televisores u otros objetos pesados encima de este producto.
- NUNCA permita que los niños escalen, trepen o se cuelguen de los cajones, puertas o estantes.
- NUNCA abra más de un cajón a la vez

18

Drawer installation

Insert the slide into the profile and close the drawer to finish locking the clip.

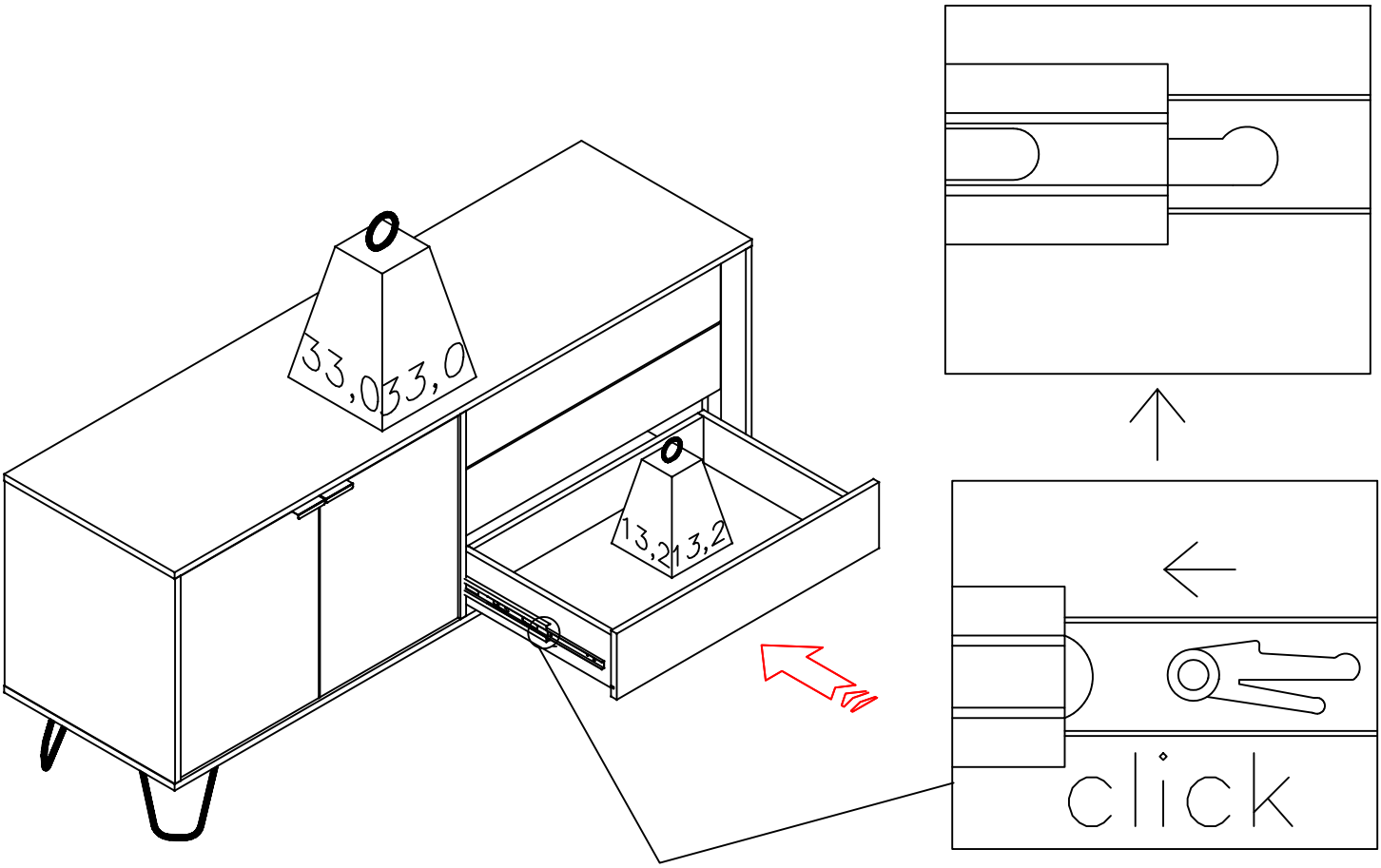

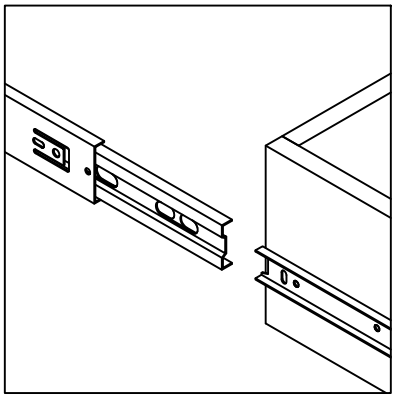

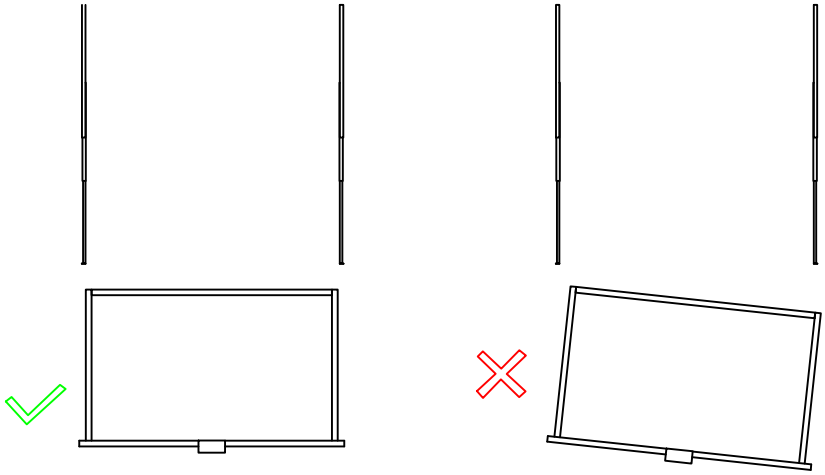

19

Drawer Removal

Open the drawer completely. Unlock the side clips, then pull out the drawer.

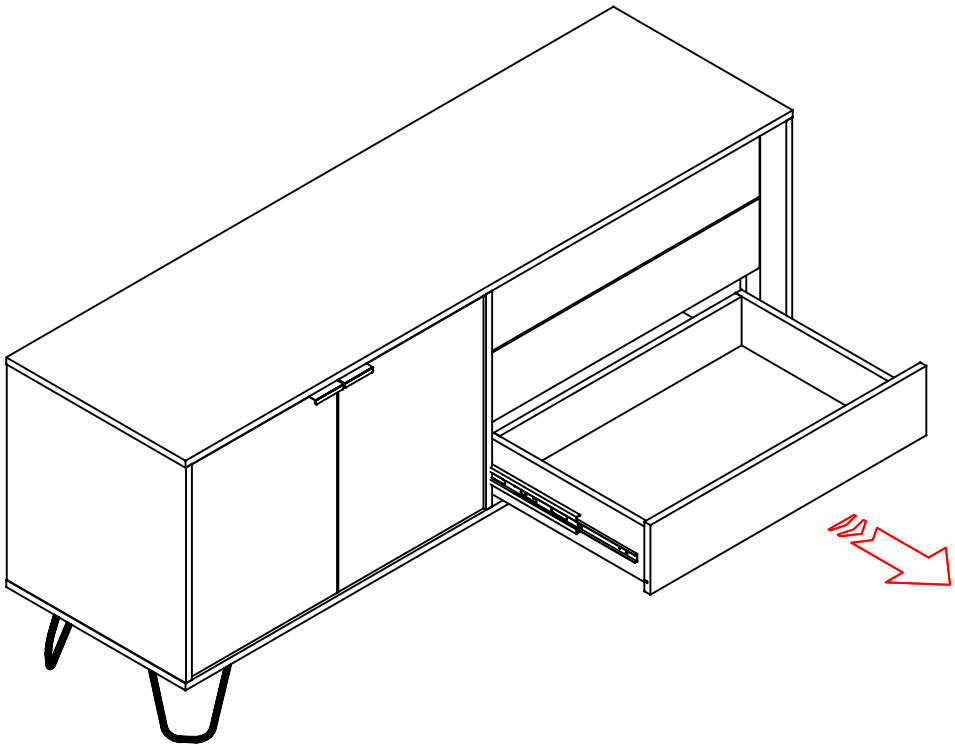
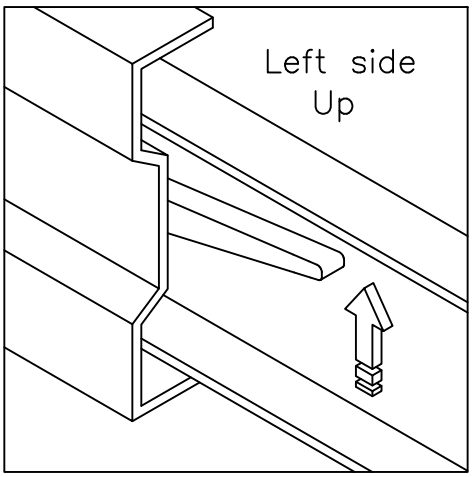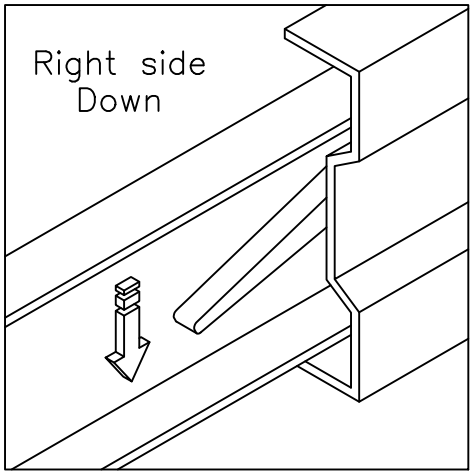
Observe the position of the side clips for disassembling the slide