ASSEMBLY INSTRUCTIONS

EU012

Warning –
CHOKING HAZARD – Small Parts Not for children under 3 years. Adult assembly required.

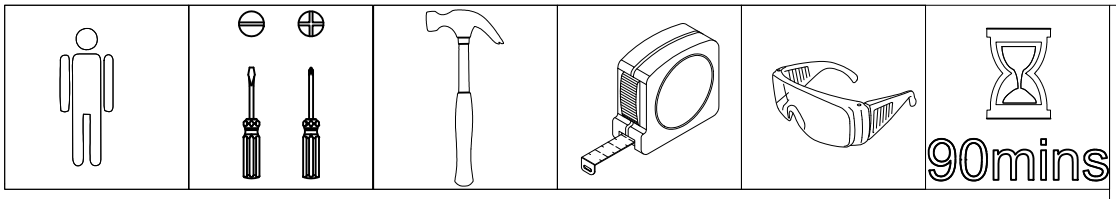

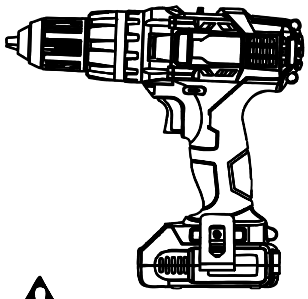

Although not required, it is recommended that a drill be used to help ease the assembly process, as some holes are not pre-drilled.

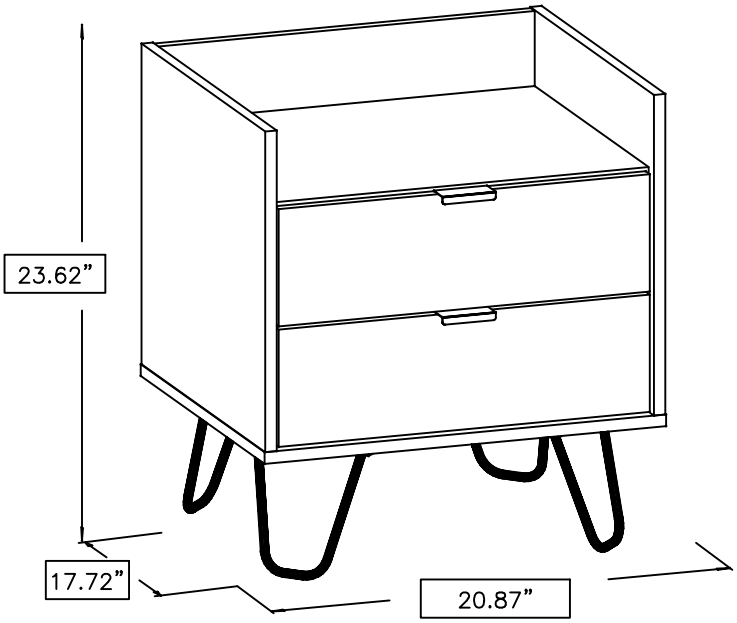

Part Identification

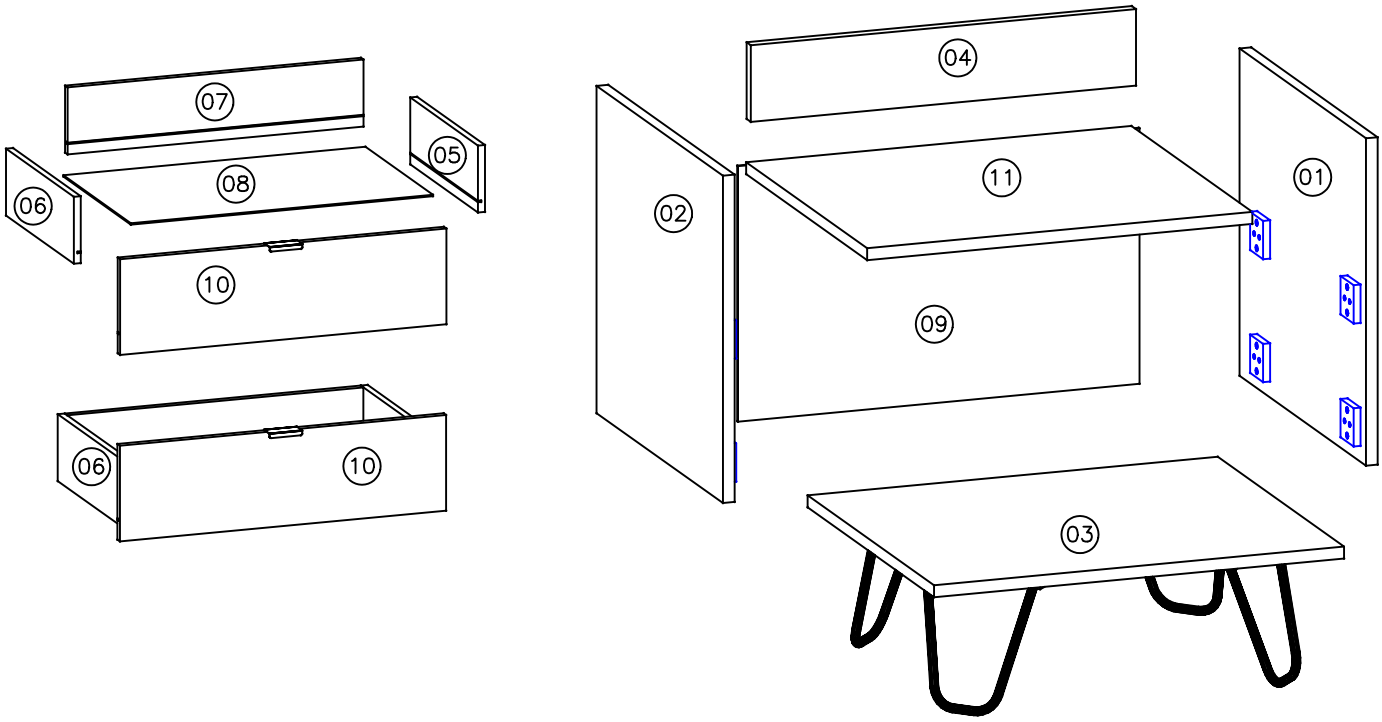

List of pieces						
Code	Description	Amount	Length (in.)	Width (in.)	Thickness (in.)	Box
01	Right side panel	1	16.14”	17.60”	.59”	A
02	Left side panel	1	16.14”	17.60”	.59”	A
03	Base panel	1	20.79”	17.60”	.59”	A
04	Upper slat	1	19.53”	3.23”	.59”	A
05	Right drawer side	2	15.75”	4.72”	.59”	A
06	Left drawer side	2	15.75”	4.72”	.59”	A
07	Back drawer	2	4.72”	16.65”	.59”	A
08	Bottom drawer	2	17.17”	15.67”	.12”	A
09	Back panel	1	20.35”	12.60”	.12”	A
10	Front drawer	2	19.21”	5.91”	.59”	A
11	Top panel	1	19.53”	17.60”	.59”	A

For issues with ASSEMBLY or PARTS please contact CS@k1intlgrp.com or Toll-free 1-877-250-2820.

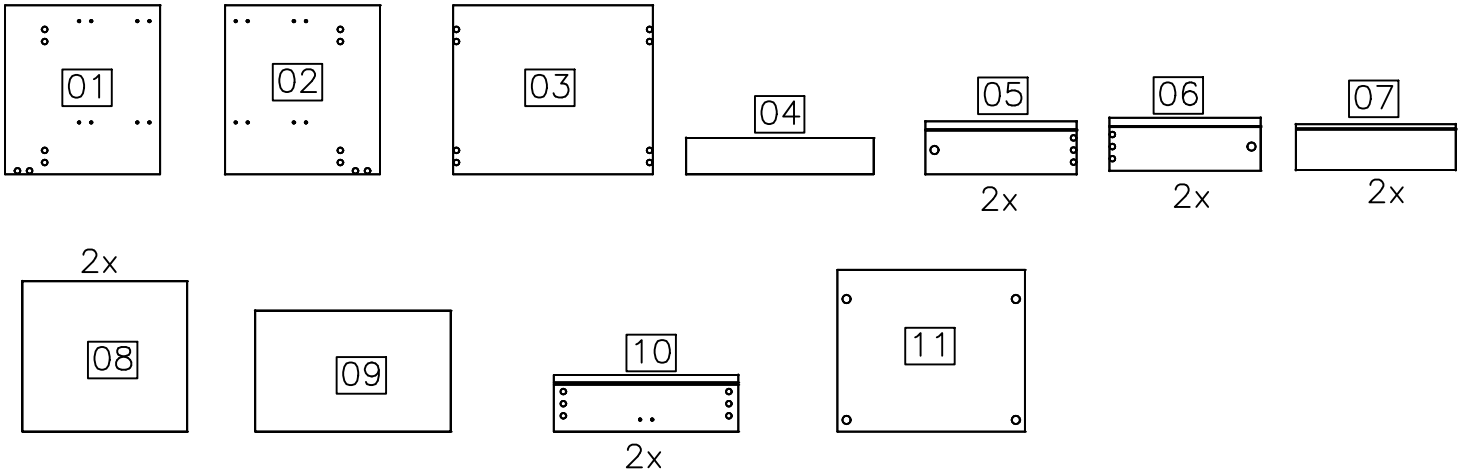

It is recommended the use of the box in which your furniture arrived in, be opened, and laid out on the floor as your work area. This helps prevent an unnecessary damages from occurring.

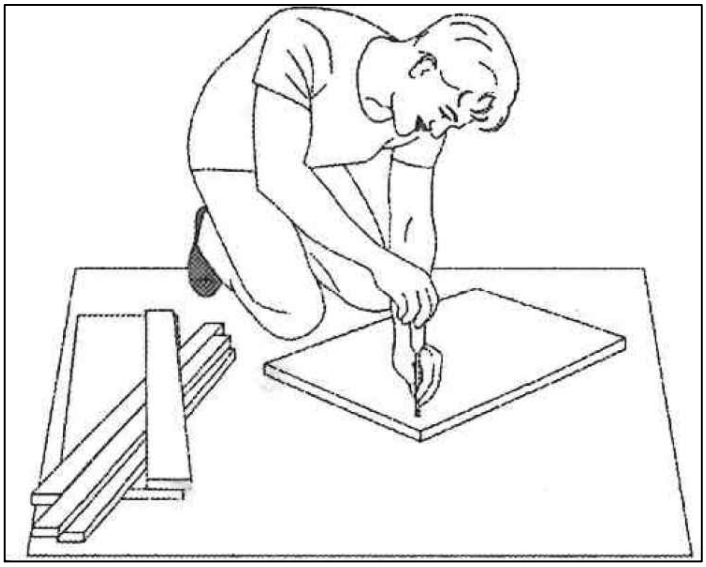

TO SCALE

Hardware

	Code	Description	Amou.
A	30945	Cam Screws	10
B	30950	Cam Locks	10
C	226	Screw 4x40	9
D	1802	Dowel 6x30mm	26
E	4214	Screw 3,5x14	44
F	5256	Screw 4x20	4
G	107	Nail 10x10	17

Anti–tipping installation

H	55606	Mounting bracket	2
I	55607	Clamp	1
J	51980	Screw 4,5x50	2
K	1178	Parafuso/ Tornillo/ Screw 3,5x16 BC	22
L	32069	Adapter sleeve	2

0 1 2 3 4 5 6 7 8 9 10 11 12 13 14 15 16 17 18

NOT TO SCALE

M	43136	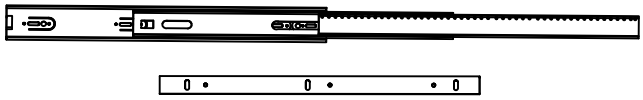 Metal slide 350mm	2
N	EBPR1=39999 (Preto Fosco)	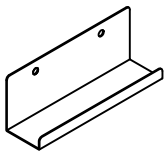 Handle 70mm	2
O	EBPR1=55600 (Preto Fosco)	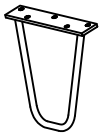 Metal foot tube	4
P	EBPR1=50493 (Ebano Grigio)	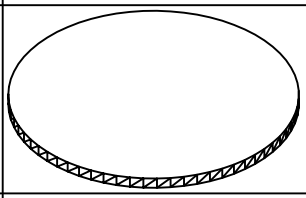 Screw cap cover 19mm	10
Q	EBPR1=09399 (Ebano Grigio)	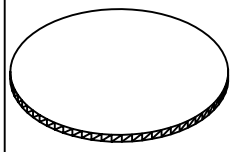 Screw cap cover 13mm	8
R	EBPR1=55287 (Preto)	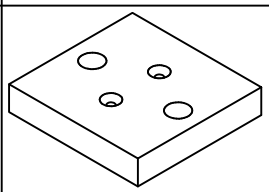 Retractor	8
S	18458	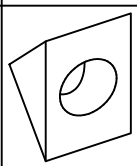 Black triangular support	4

01 Saco médio para acessórios (Internal production data)
01 Saco pequeno para puxador (Internal production data)

1A Drawer Preassembly

This process is repeated twice

D		4

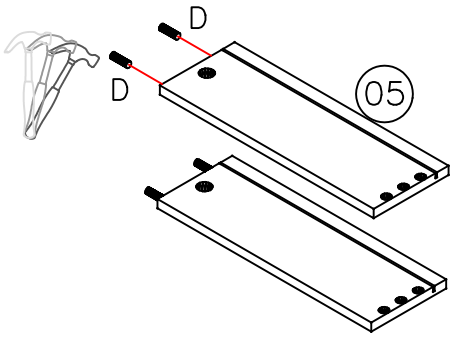

1B Drawer Preassembly

This process is repeated twice

D		4

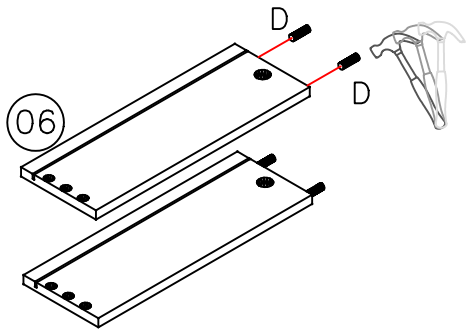

1C Drawer Preassembly

This process is repeated four times

M		4
E		12

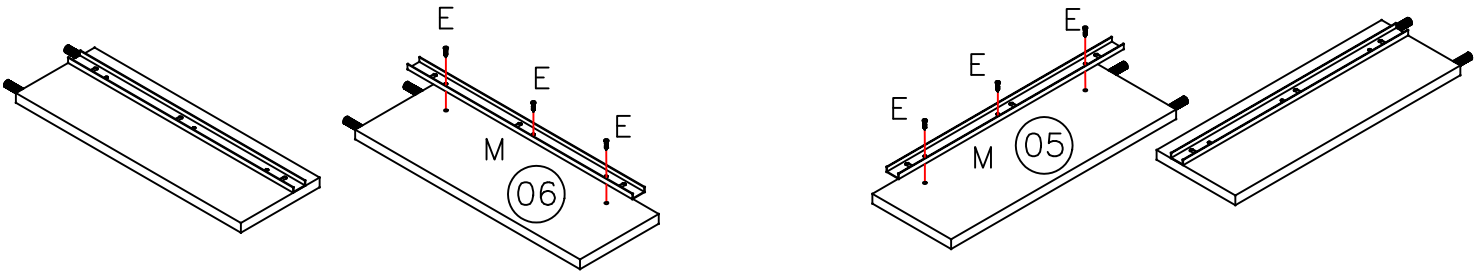

Correct position of the screws "E"

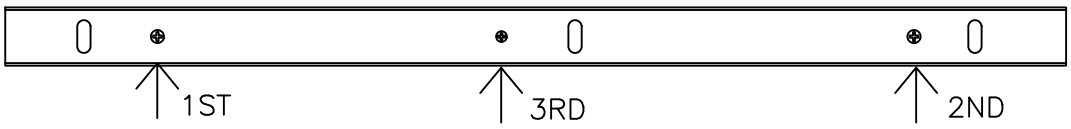

To adjust the height of the drawer, the "E" screw must be placed in the oval horizontal spacing of the "M" rail

1ST

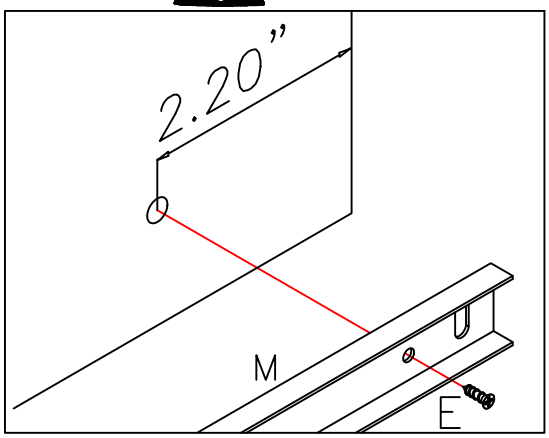

2ND

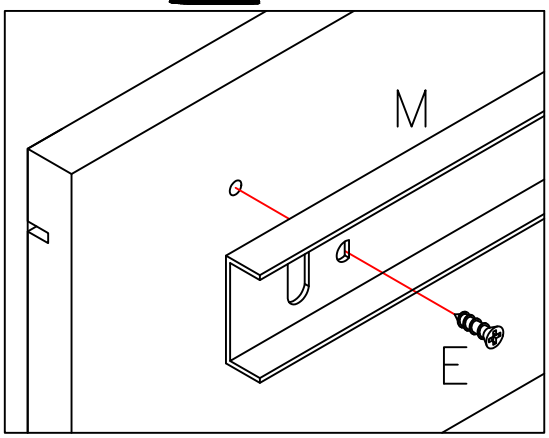

3RD

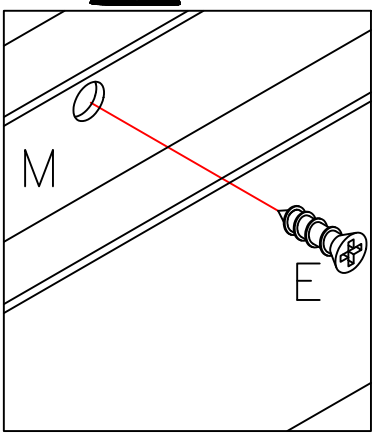

Use the indent as a guide for installing the rails

CS@k1intlgrp.com or Toll-free 1-877-250-2820.

1D Drawer Preassembly

This process is repeated twice

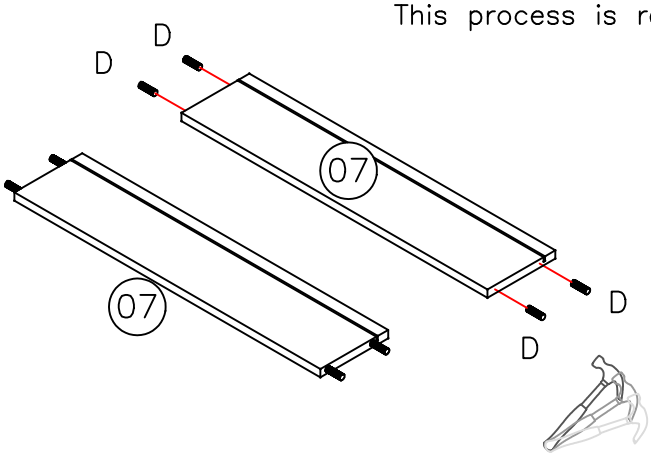

D		8

2 Drawers Mounting

This process is repeated twice

C		4
Q		4

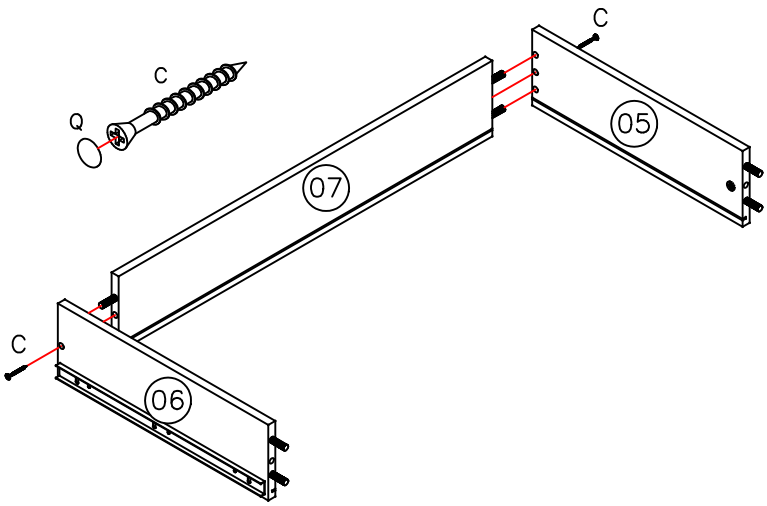

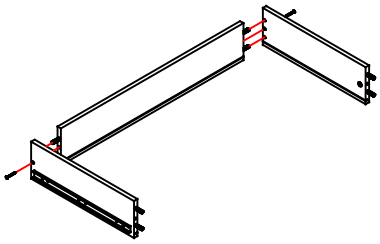

3 Drawer Assembly

This process is repeated twice

A		4
N		2
E		4

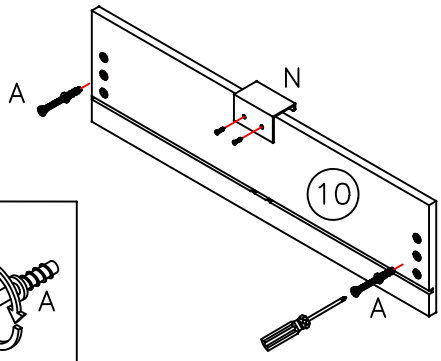

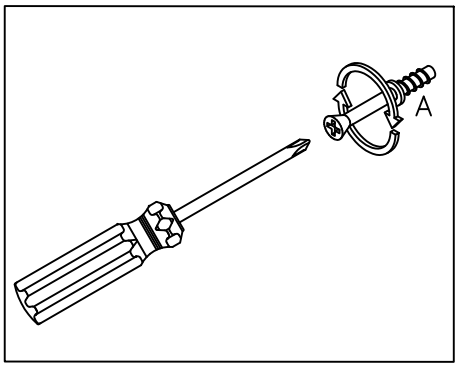

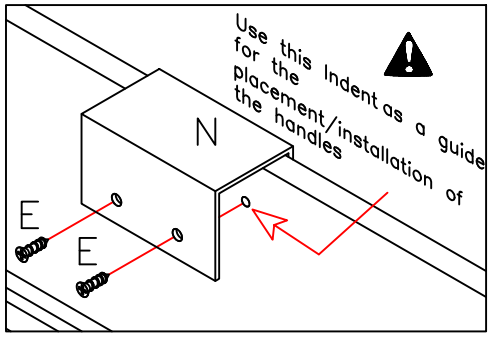

4

Drawers Mounting

This process is repeated twice

B		4
P		4

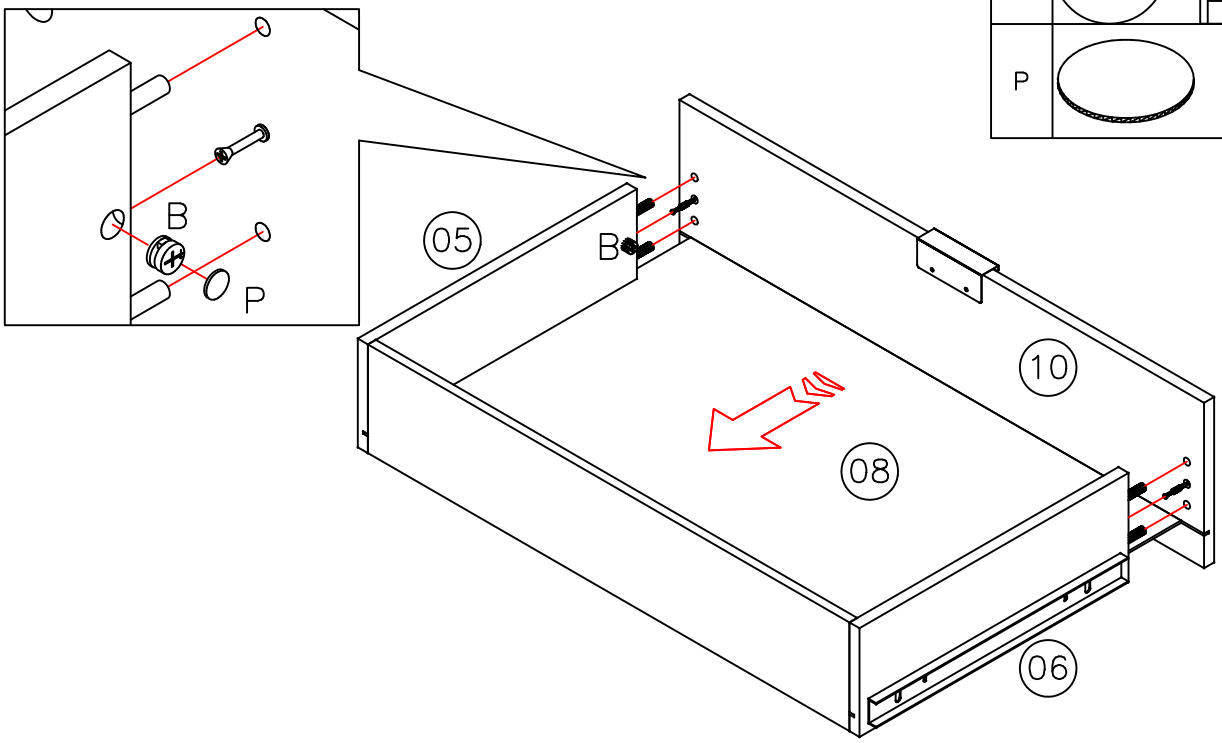

5

Drawer final assembly

This process is repeated twice

F		4
S		4

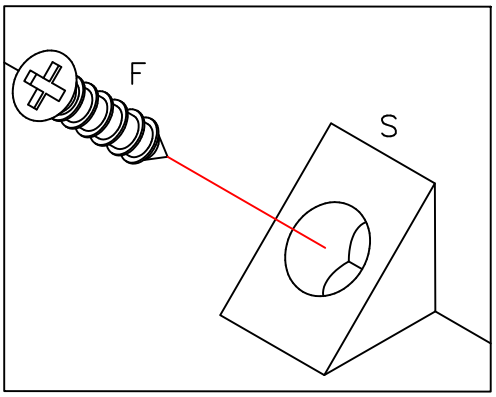

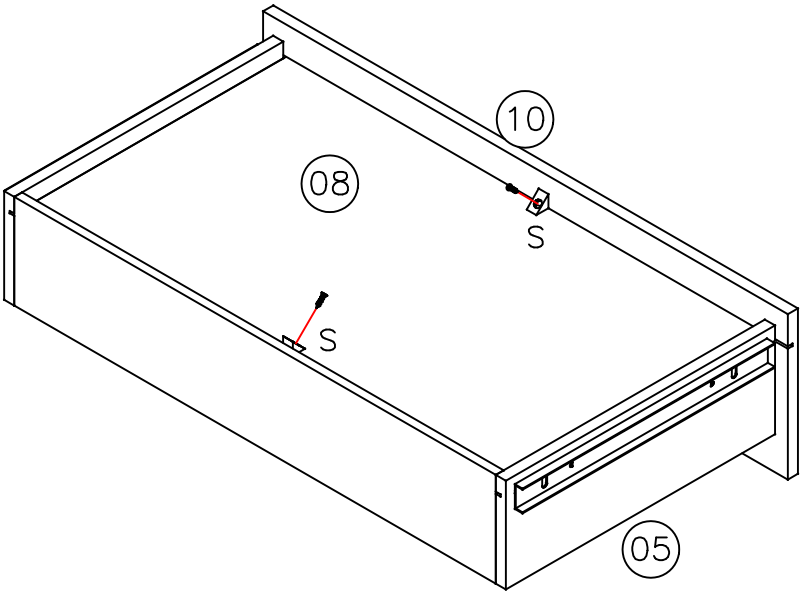

If you have any further questions regarding the assembly of the drawer, access the website through the QR CODE

CS@k1intlgrp.com or Toll-free 1-877-250-2820.

6 Preassembly of parts

D	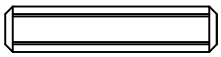	10

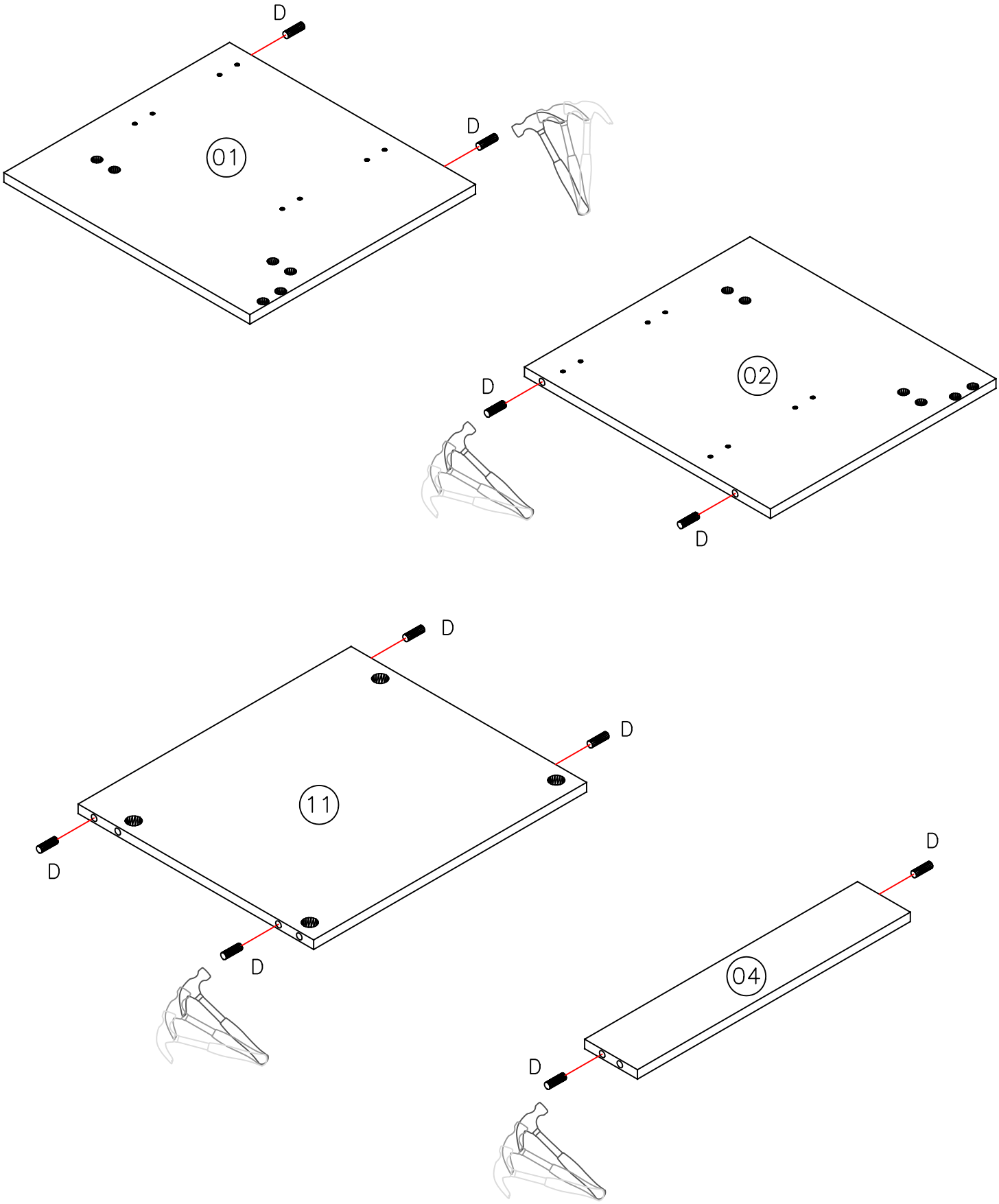

7

E		16
R		8

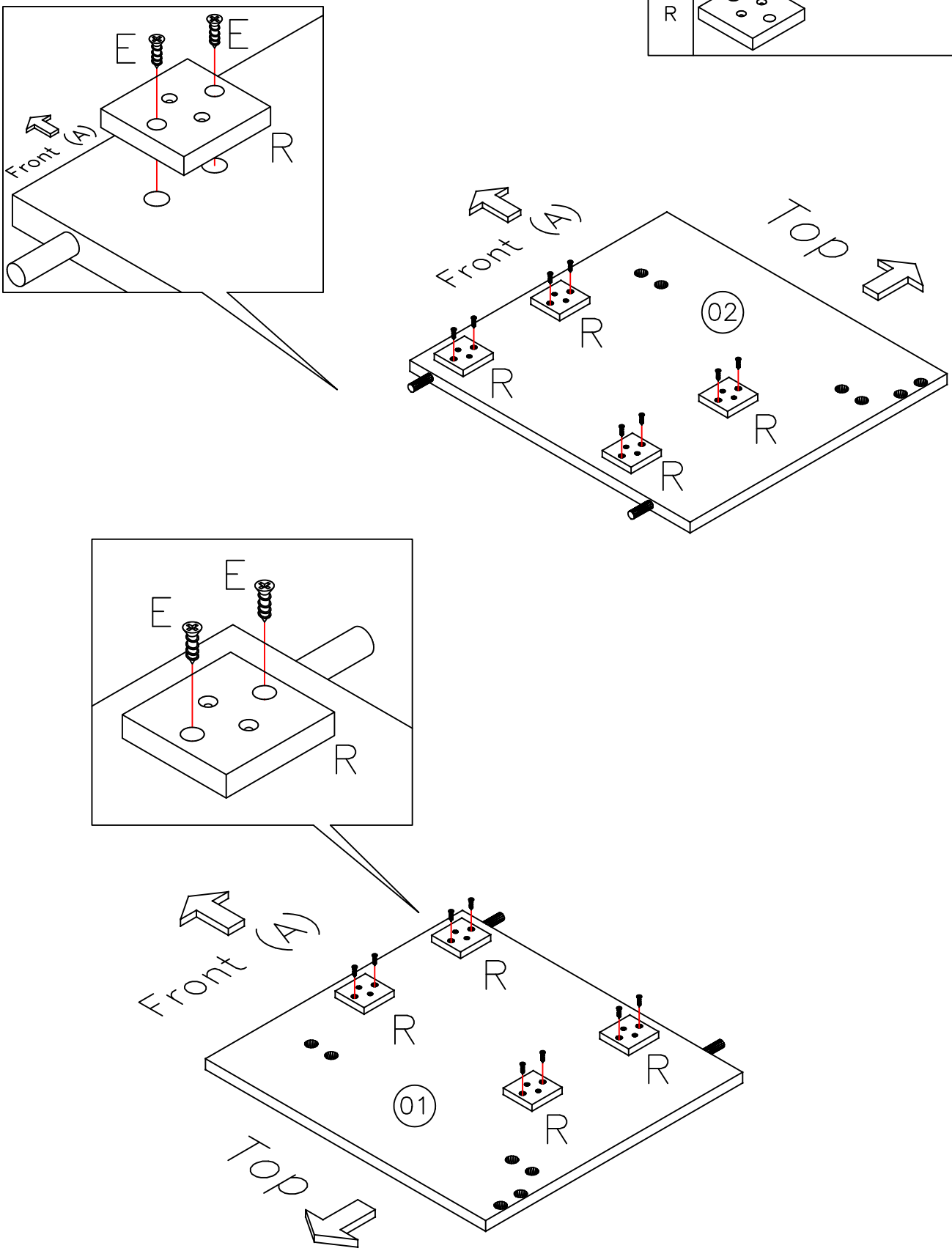

8

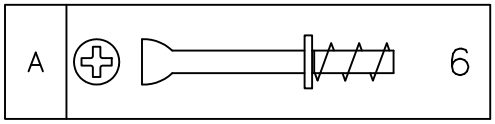

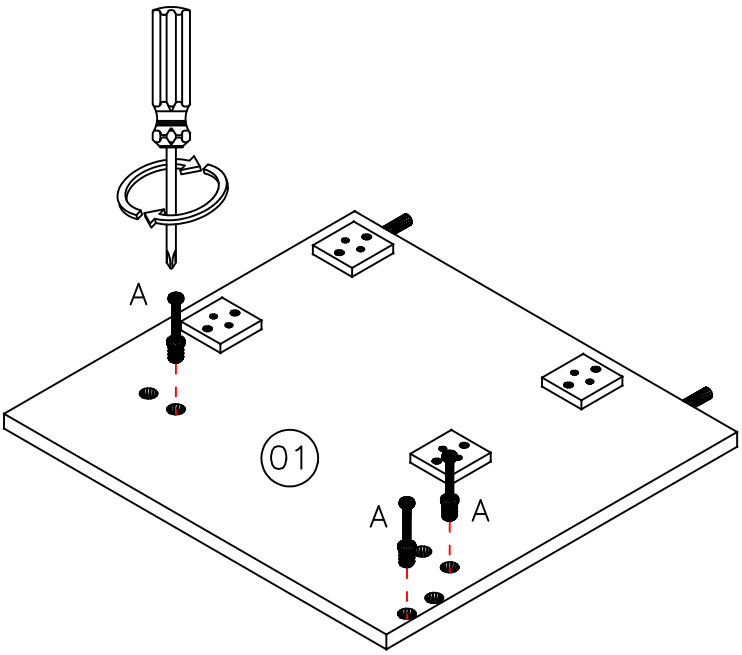

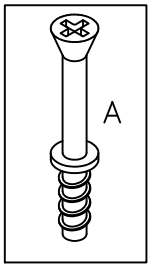

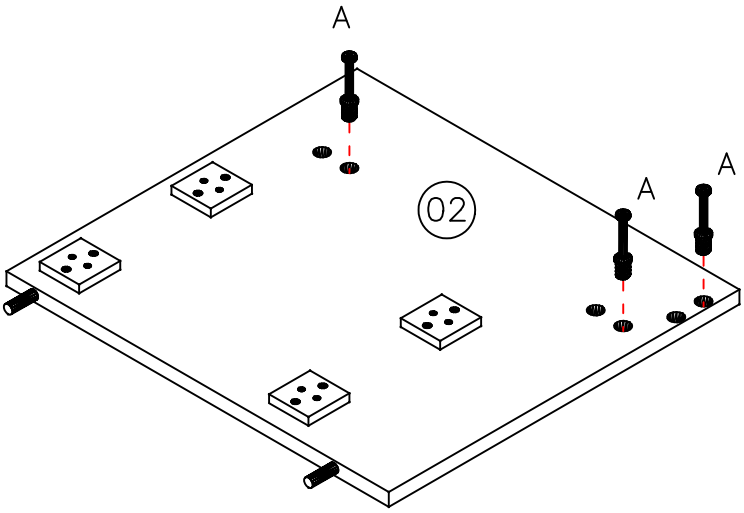

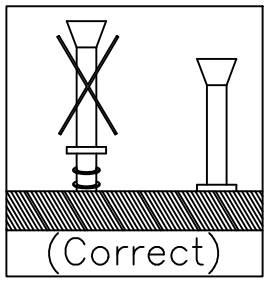

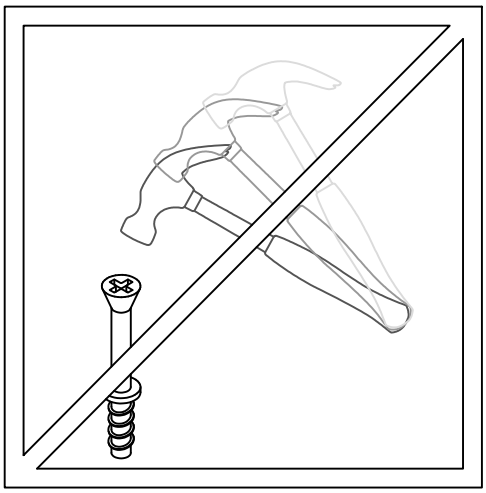

9

M		4
E		8

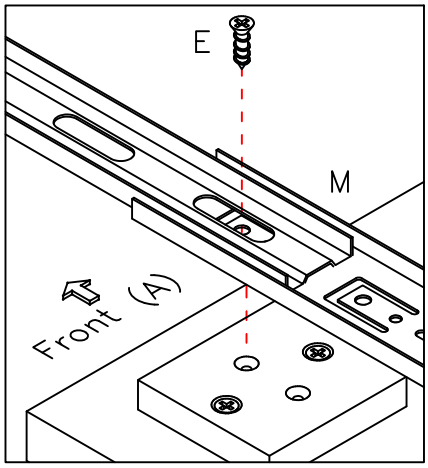
E
M
Front (A)

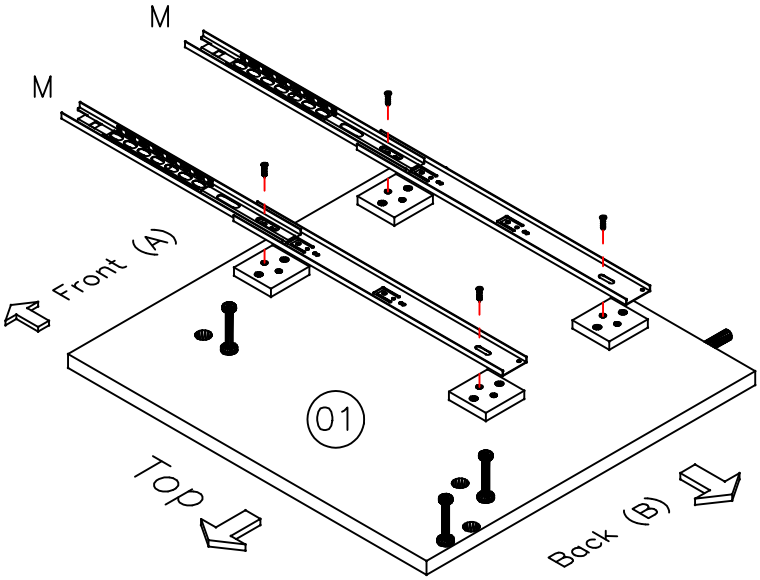
M
M
Front (A)
01
Top
Back (B)

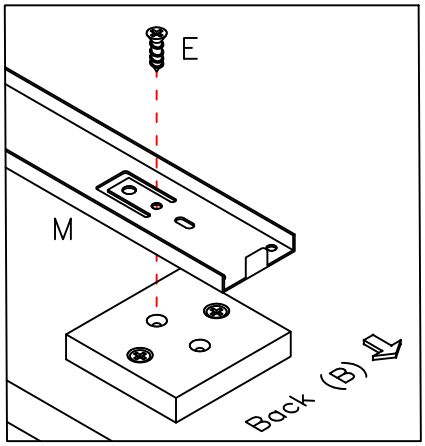
E
M
Back (B)

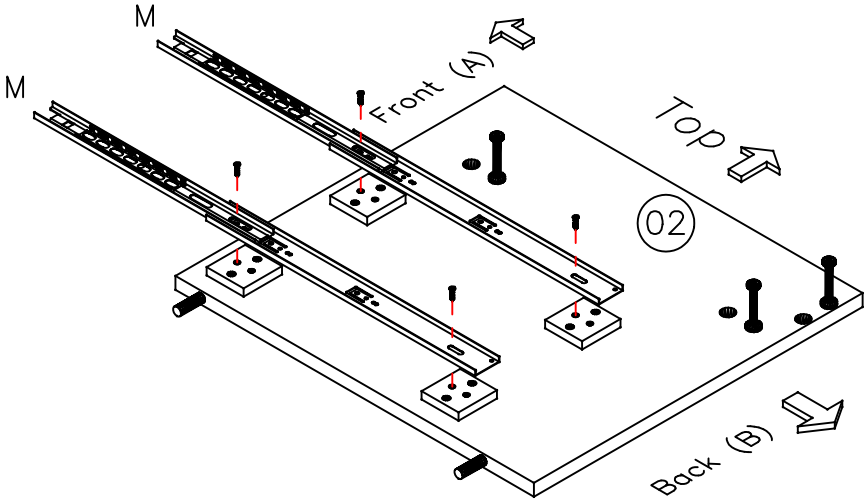
M
M
Front (A)
Top
02
Back (B)

10

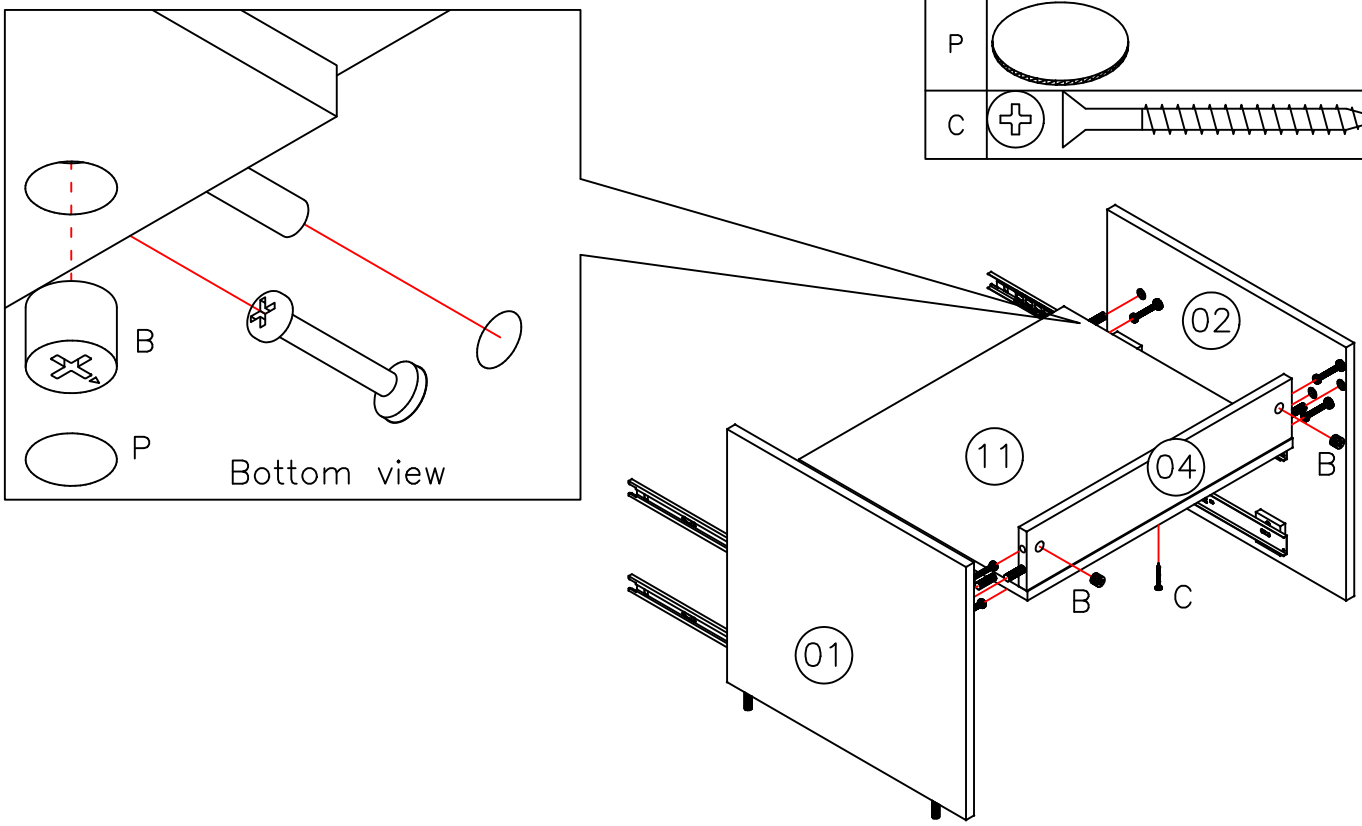

B		6
P		6
C		1

11

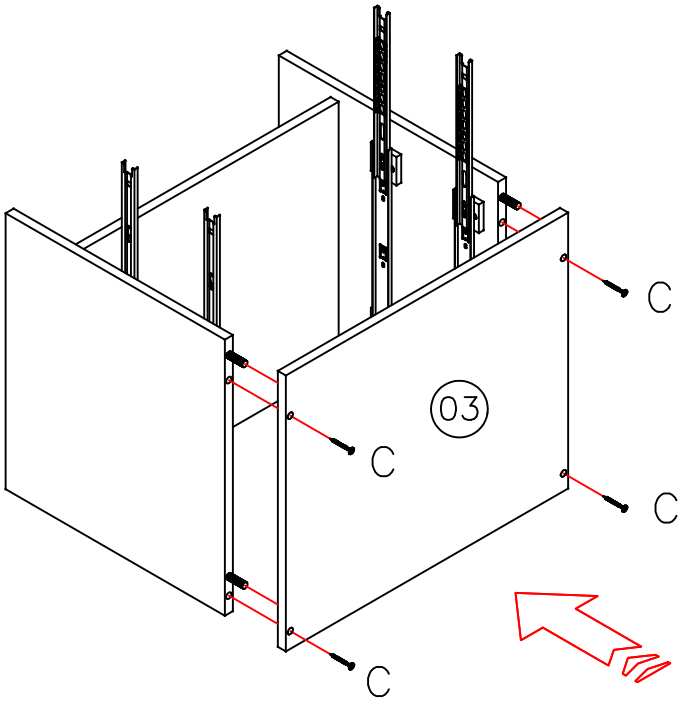

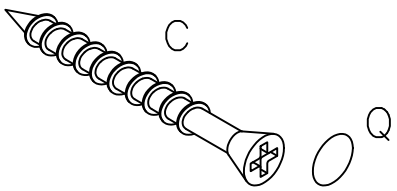

C		4
Q		4

12

K		20
O		4

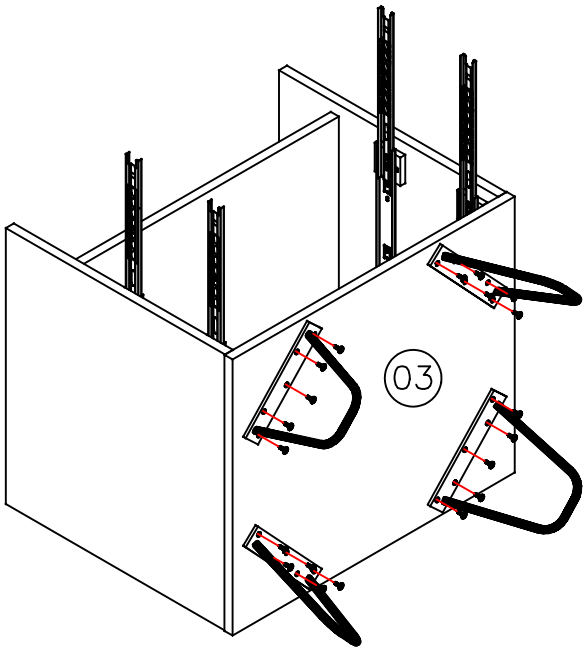

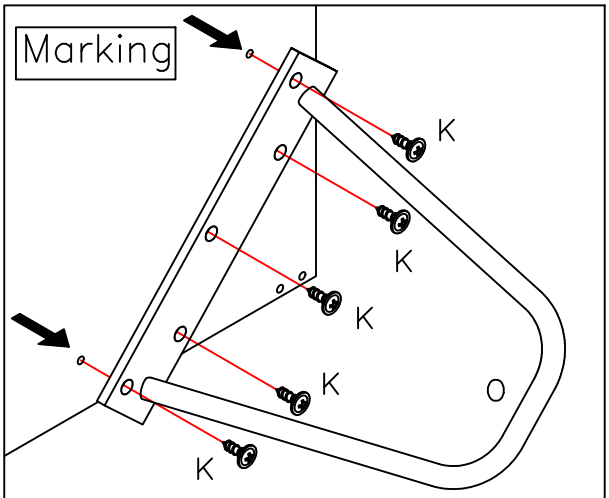

* TO FIX THE FEET, USE THE MARKING CONTAINED IN THE BASE.
(IMAGE ILLUSTRATING ABOVE)

13

G		17

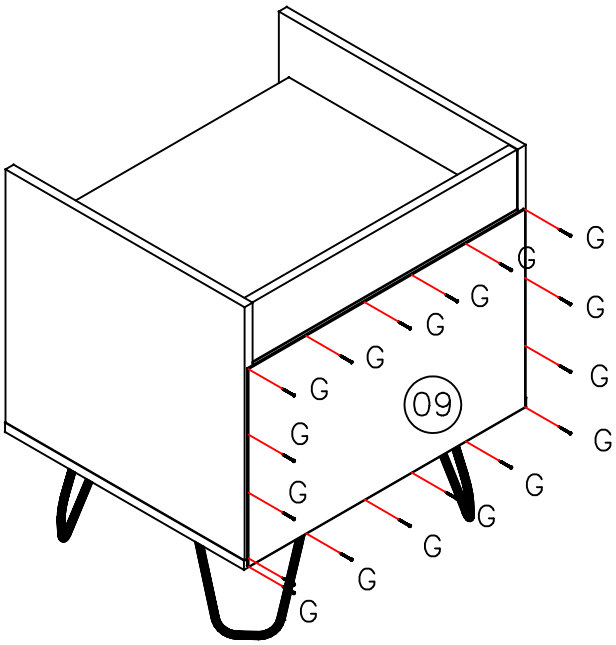

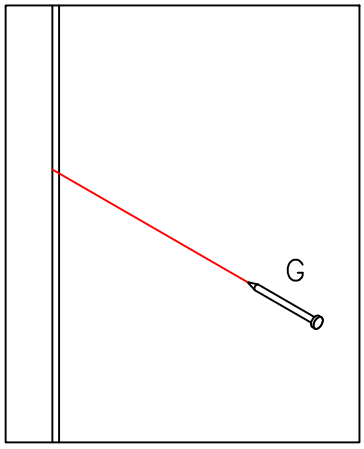

14 NOTE: Do not turn the DRYWALL ANCHOR into a wall stud. If you prefer to fasten the SAFETY ANTI–TIPPING to a wall stud, go to your local hardware store for proper hardware.

Compress the wings of anchor before inserting.

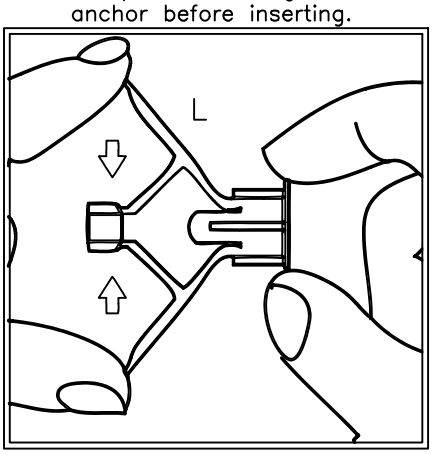

Insert the chuck into the hole of the base material.

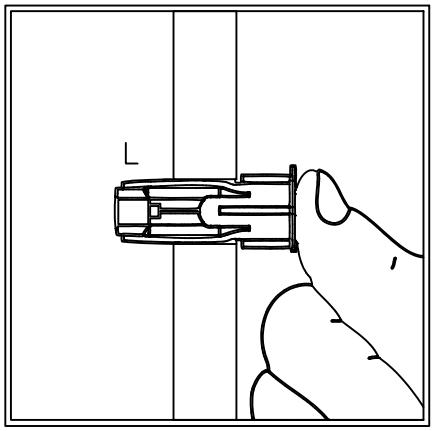

Position the object over the bushing and secure it with a screw.

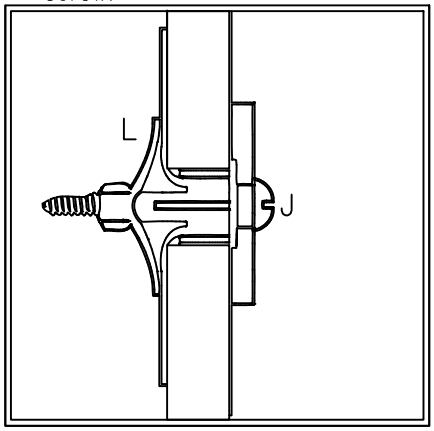

Anti–tipping installation		
H	Mounting bracket	2
I	Clamp	1
J	Screw 4,5x50	2
K	Screw 3,5x16 BO	2
L	Anchor	2

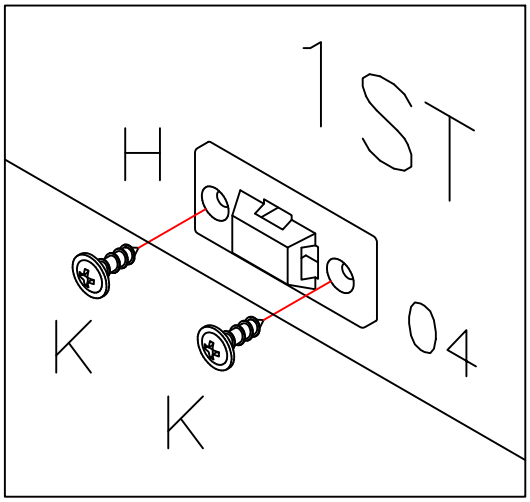

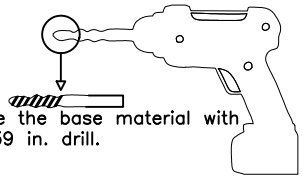

Pierce the base material with a 0.39 in. drill.

Important
- The minimum length of the screw must be the bushing length + object thickness that will be fixed.
- To guarantee the wing expansion function of the bushing, after the screw head is at the object to be fixed, one must continue to rotate the screw until maximum torque is reached.

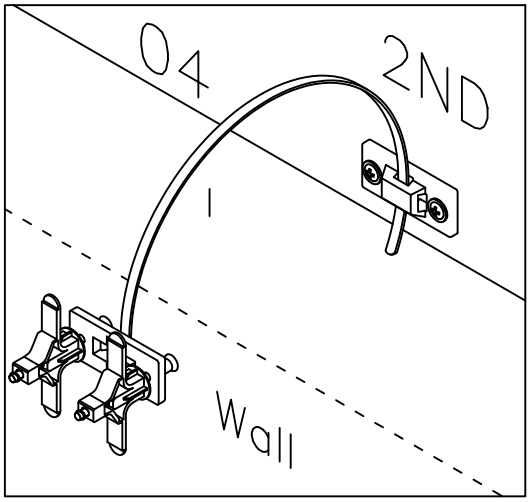

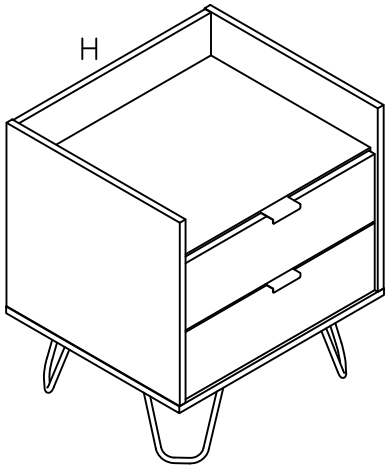

A WARNING –Anti–Tip Advisory

Potential of serious fatal crushing injuries may occur from furniture tip–over. To help prevent tip–over:

ALWAYS INSTALL the tip–over restrain that came with your furniture. This tip–over restrains only reduces but does NOT completely eliminate the risk of tip–over

- ALWAYS Place the heaviest items in the lowest/bottom drawer.
- NEVER place TV's or other heavy objects on top of this product.
- NEVER allow children to scale/climb/hang on the drawers, doors, or shelves.
- NEVER open more than one drawer at a time.

B ADVERTENCIA – Aviso antivuelco

Pueden producirse lesiones graves por aplastamiento mortales debido al vuelco de los muebles. Para ayudar a prevenir vuelcos:

- SIEMPRE INSTALE el sistema de retención que viene con sus muebles. Este sistema antivuelco solo reduce pero NO elimina por complet el riesgo de vuelco.
- SIEMPRE coloque los artículos más pesados en el cajón más bajo /inferior.
- NUNCA coloque televisores u otros objetos pesados encima de este producto.
- NUNCA permita que los niños escalen, trepen o se cuelguen de los cajones, puertas o estantes.
- NUNCA abra más de un cajón a la vez

15

Drawer installation

Insert the slide into the profile and close the drawer to finish locking the clip.

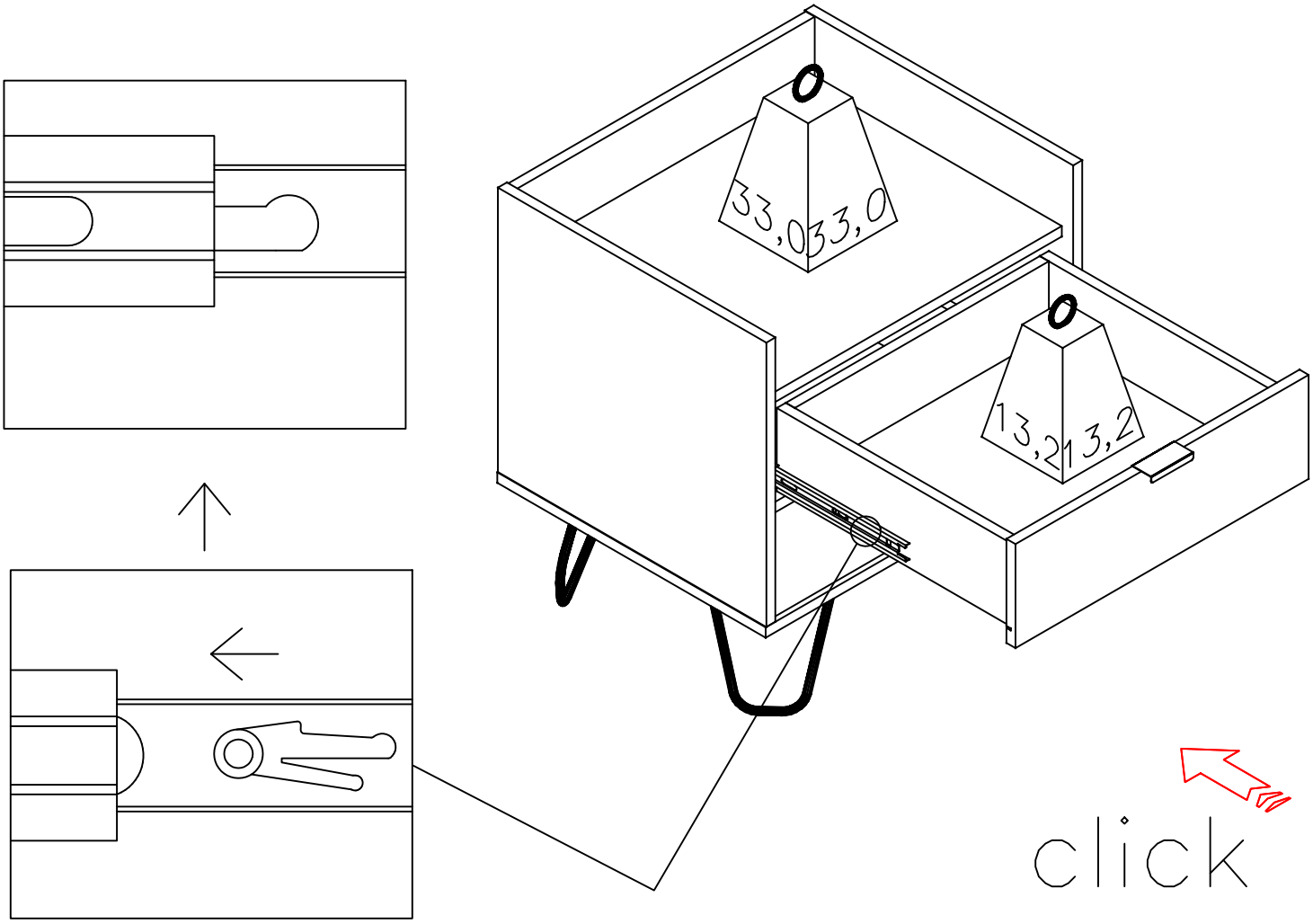

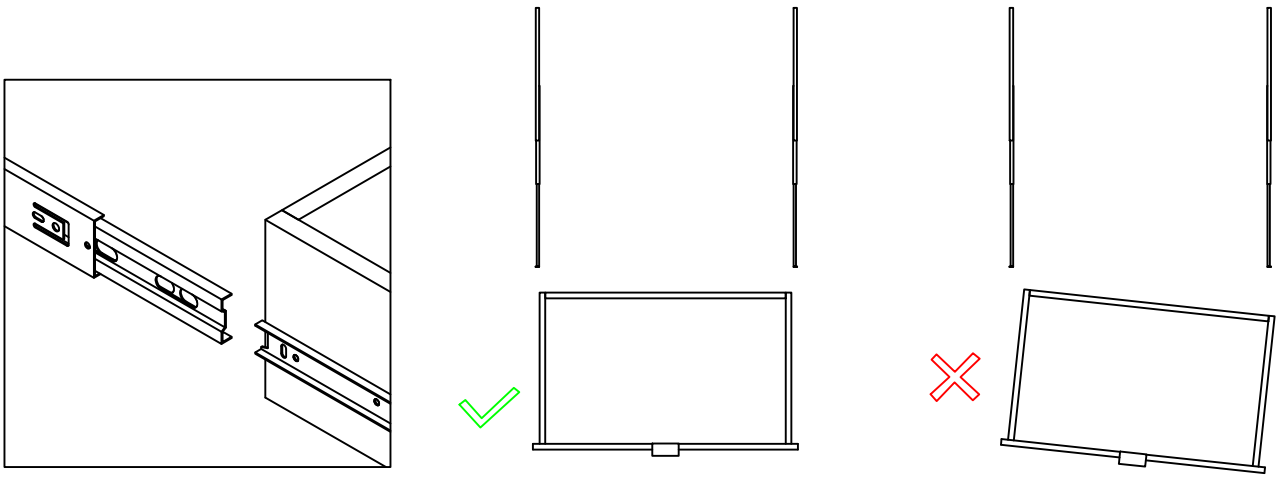

16

Drawer Removal

Open the drawer completely.
Unlock the side clips, then pull out the drawer.

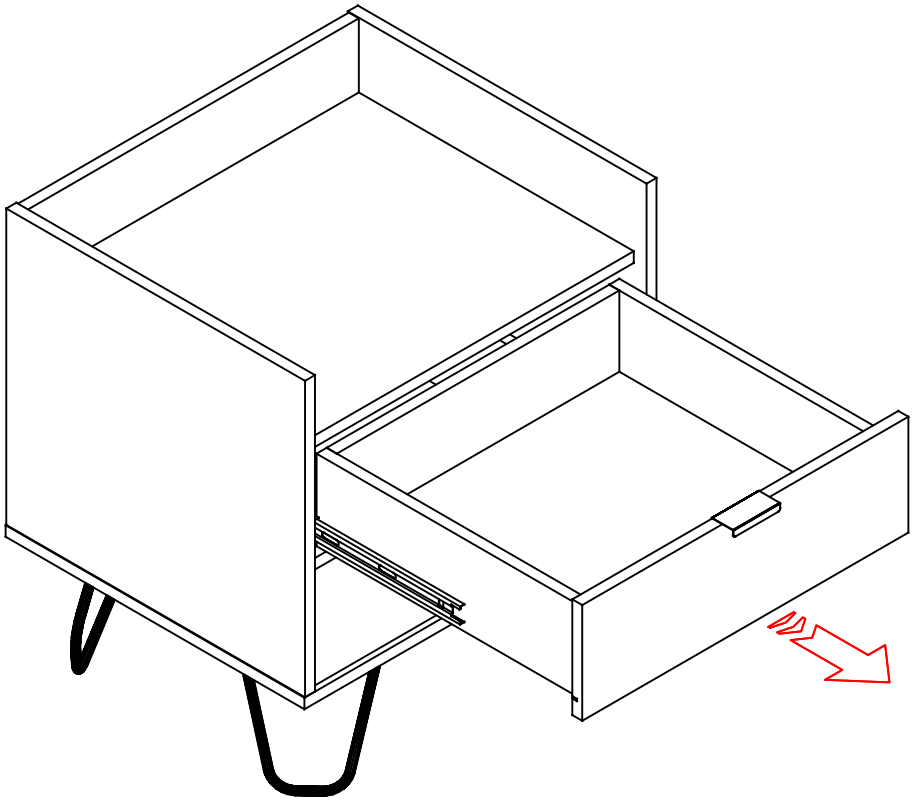
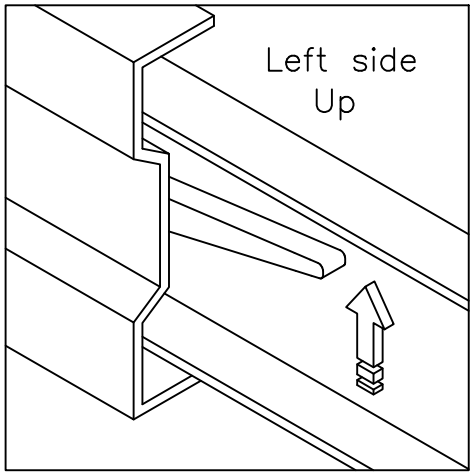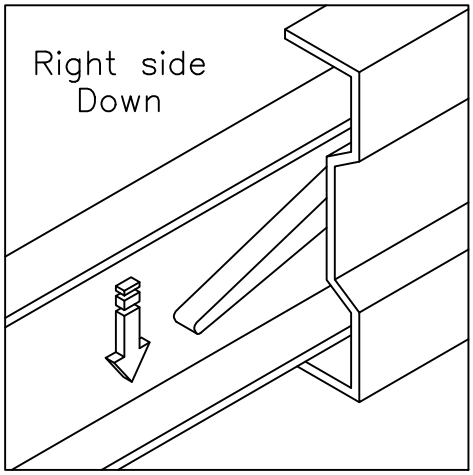
Observe the position of the side clips for disassembling the slide