ASSEMBLY INSTRUCTIONS

EU026

Warning –
CHOKING HAZARD – Small Parts Not for children under 3 years. Adult assembly required.

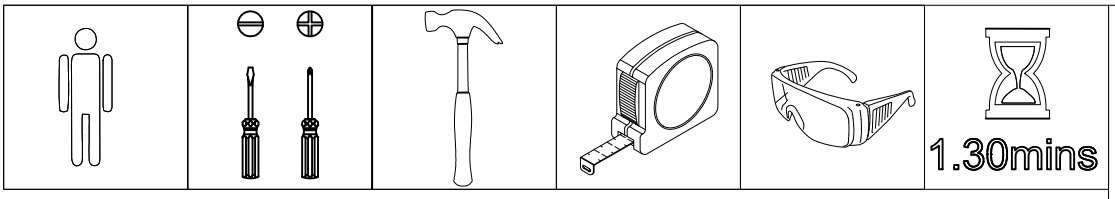

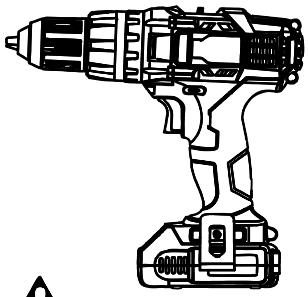

Although not required, it is recommended that a drill be used to help ease the assembly process, as some holes are not pre-drilled.

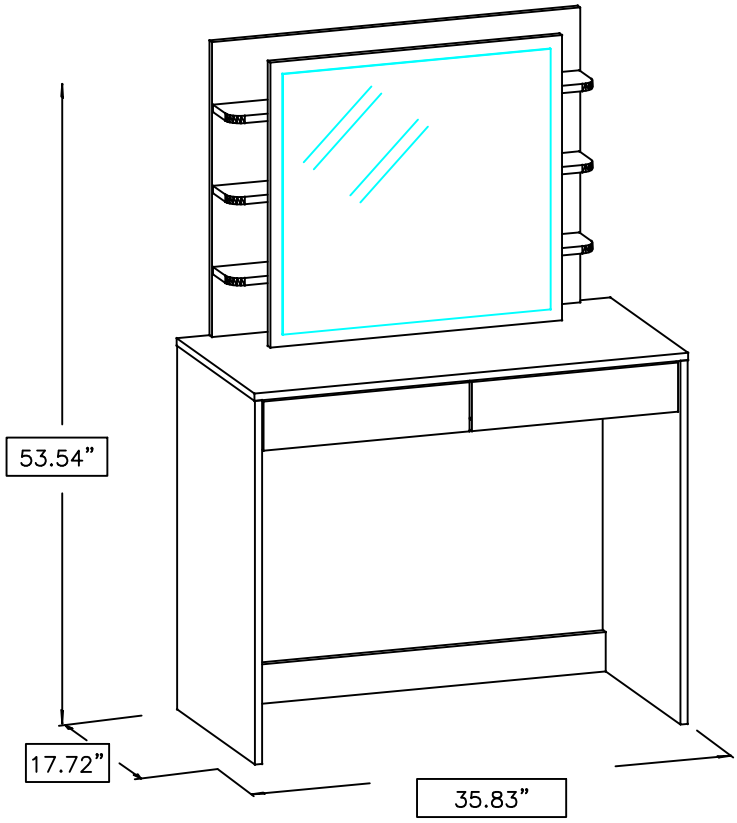

Part Identification

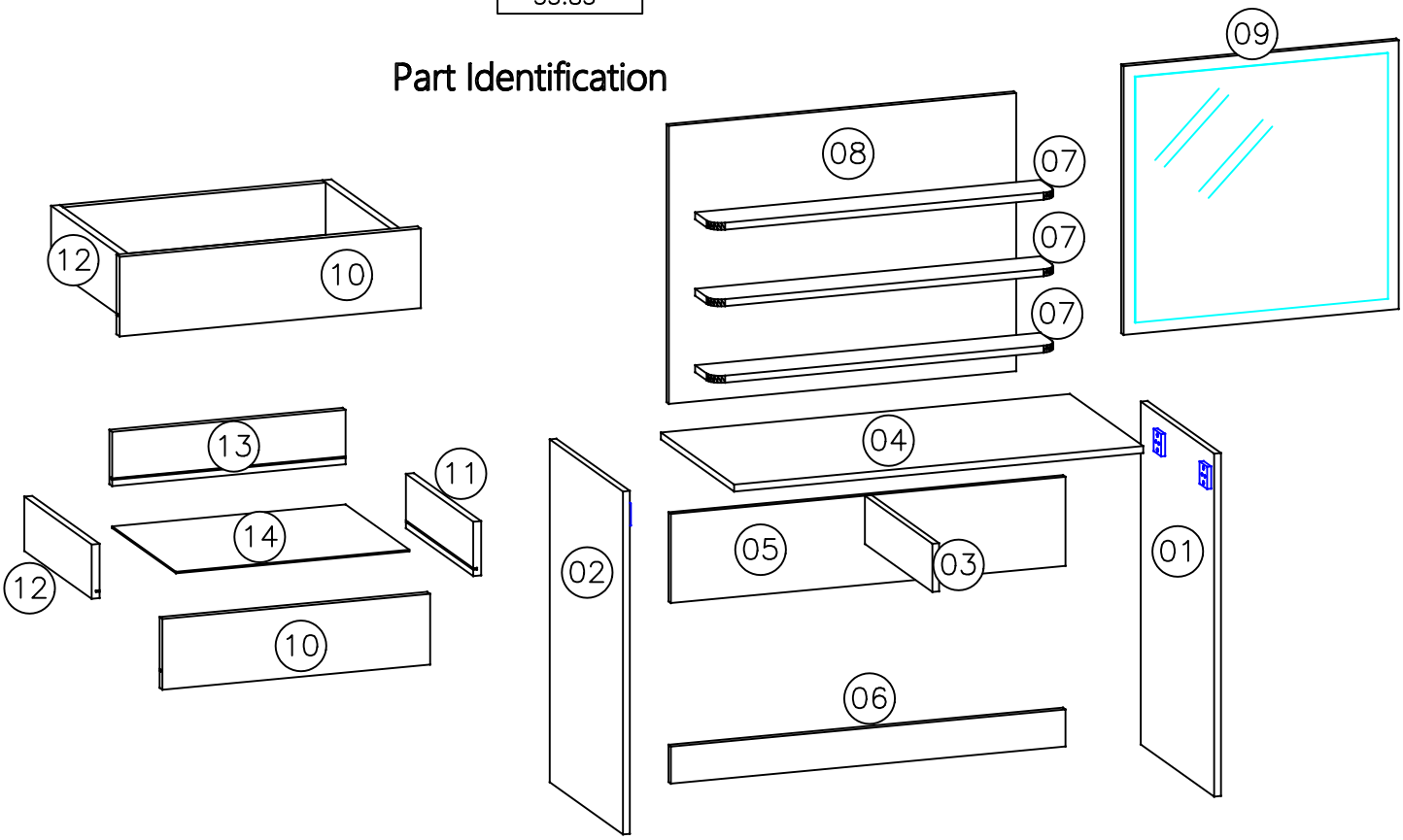

List of pieces						
Code	Description	Amount	Length (in.)	Width (in.)	Thickness (in.)	Box
01	Right side	1	29.13”	17.60”	.59”	A
02	Left side	1	29.13”	17.60”	.59”	A
03	Division	1	16.18”	4.09”	.59”	A
04	Top bottom panel	1	35.71”	17.60”	.59”	A
05	Strengthening	1	34.45”	7.56”	.59”	A
06	Back baseboard	1	34.45”	3.15”	.59”	A
07	Shelf	3	30.16”	3.94”	.59”	A
08	Back panel	1	30.31”	23.62”	.59”	A
09	Mirror part	1	24.02”	22.83”	.59”	A
10	Front drawer	2	16.97”	3.94”	.59”	A
11	Right drawer side	2	14.17”	2.99”	.59”	A
12	Left drawer side	2	14.17”	2.99”	.59”	A
13	Back drawer	2	14.41”	2.99”	.59”	A
14	Bottom drawer	2	14.92”	14.09”	.12”	A

For issues with ASSEMBLY or PARTS please contact CS@k1intlgrp.com or Toll-free 1-877-250-2820.

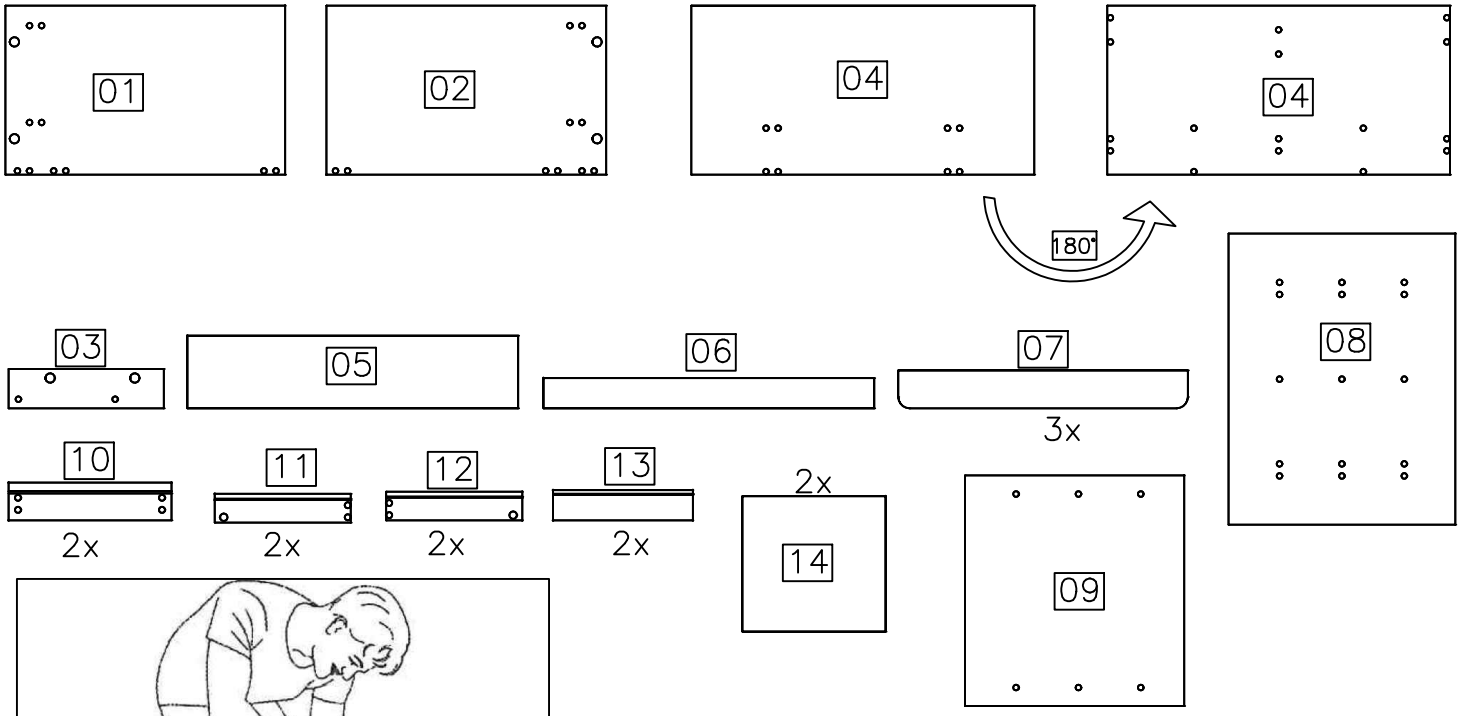

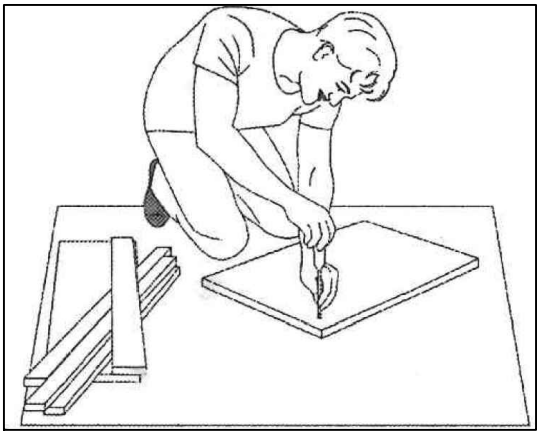

It is recommended the use of the box in which your furniture arrived in, be opened, and laid out on the floor as your work area. This helps prevent an unnecessary damages from occurring.

TO SCALE

Hardware			
	Code	Description	Amou.
A	30945	Cam Screws	10
B	30950	Cam Locks	10
C	226	Screw 4x40	23
D	5256	Screw 4x20	4
E	4214	Screw 3,5x14	36
F	1802	Dowel 6x30mm	36
G	108	Prego/Clavo/Nail 12x12	4
Anti–tipping installation			
H	55606	Mounting bracket	2
I	55607	Clamp	1
J	51980	Screw 4,5x50	2
K	1178	Screw 3,5x16 BC	2
L	32069	Adapter sleeve	2

NOT TO SCALE

M	1901	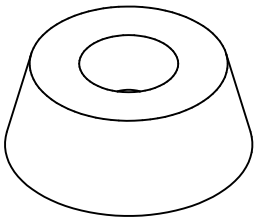 Shoe black	4
N	BR/OW=55558 (Branco)	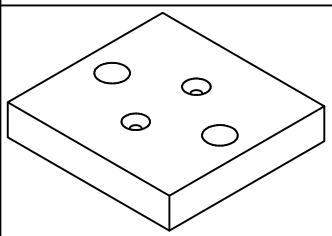 Retractor	4
O	169	Metal slide 350mm	2
P	OW=53287 (Off White) BR=45292 (Branco Liso)	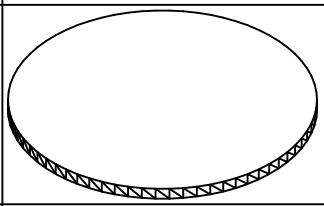 Tap hole 19mm	10
Q	OW=53286 (Off White) BR=8010 (Branco Liso)	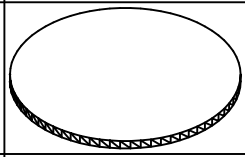 Tap hole 13mm	10
R	18458	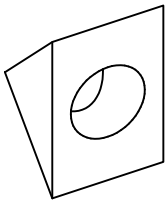 Black triangular support	4
S	55660	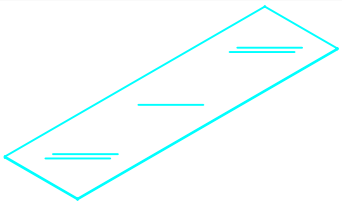 Mirror 560x530x3mm	1
T	8578	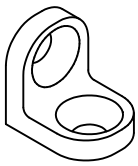 angle bracket "L"	6
01 Saco médio para acessórios (Internal production data)			

1A Drawer Preassembly

This process is repeated twice

F	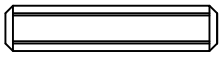	2

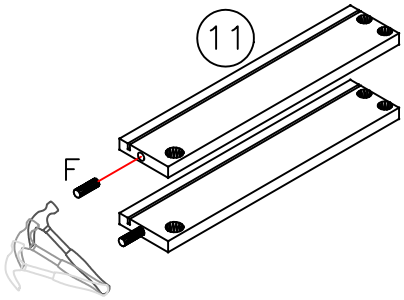

1B Drawer Preassembly

This process is repeated twice

F		2

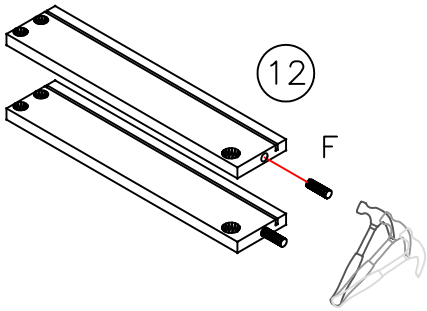

1C Drawer Preassembly

This process is repeated twice

F		4

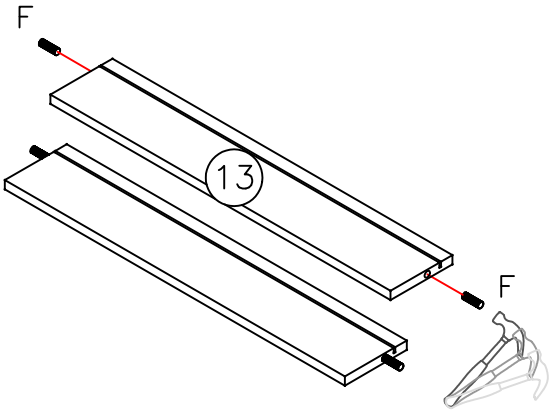

1D

Drawer Preassembly

This process is repeated twice

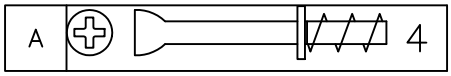

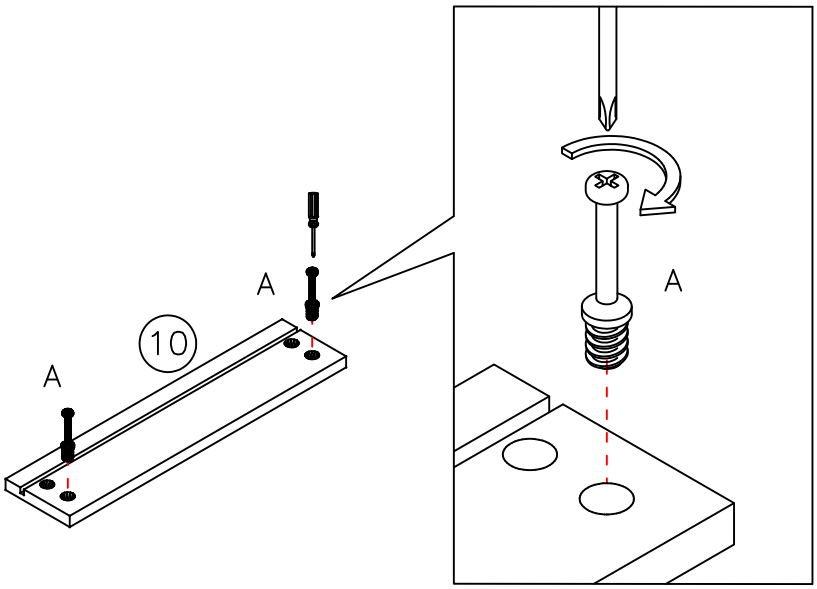

2

Drawers Mounting

This process is repeated twice

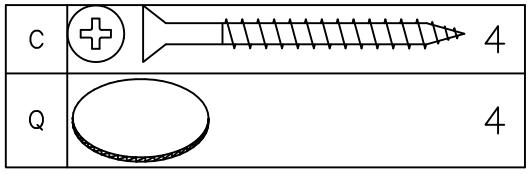

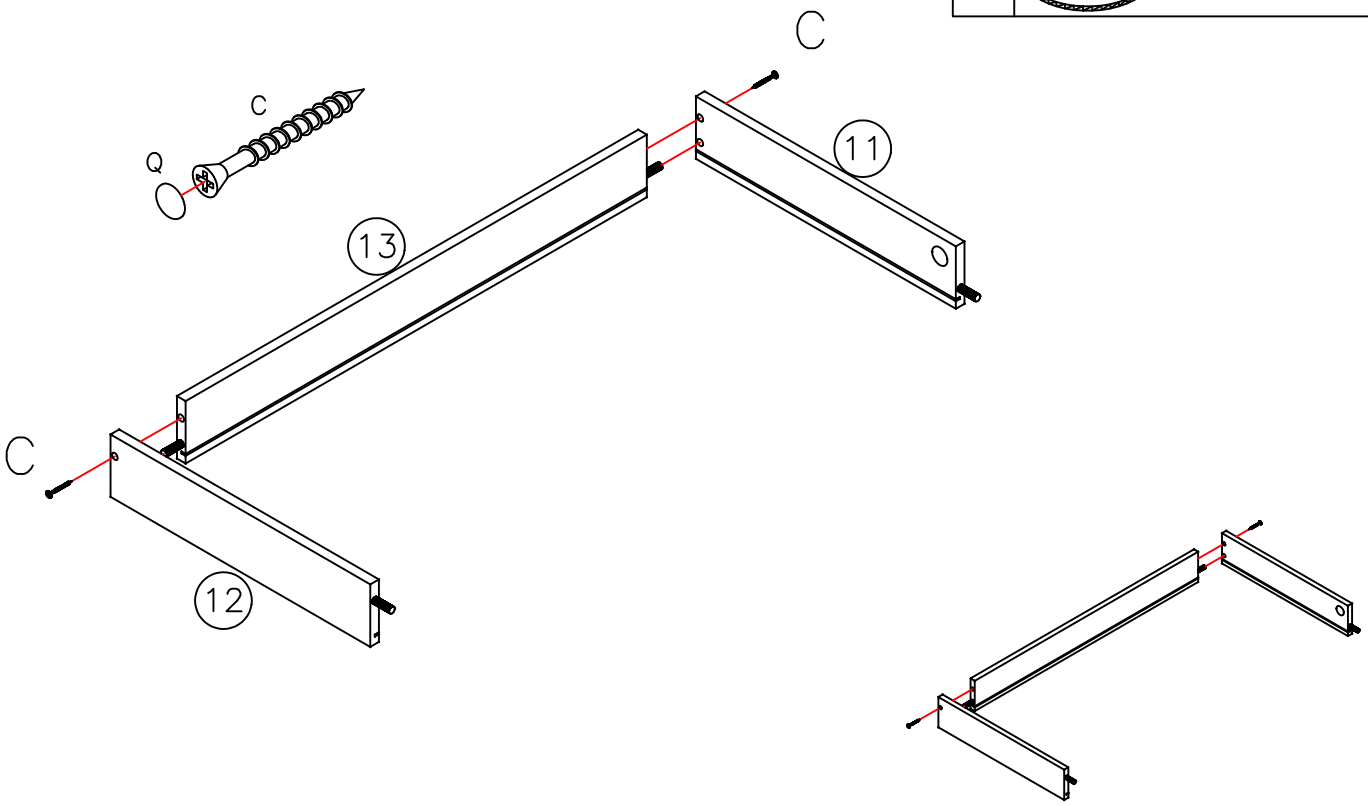

3

Drawers Mounting

This process is repeated twice

B		4
P		4

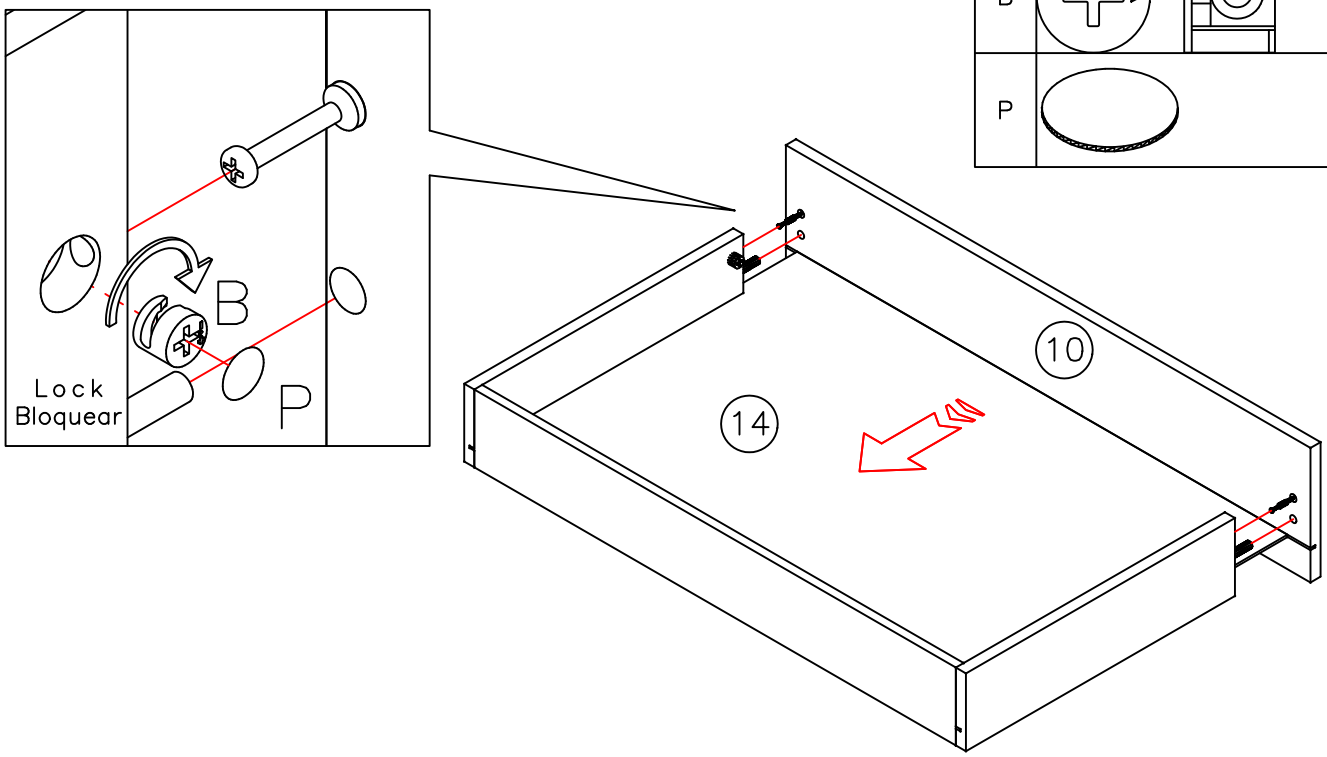

4

Drawers Mounting

This process is repeated twice

D		4
R		4

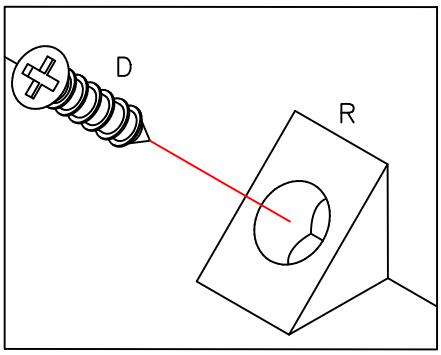

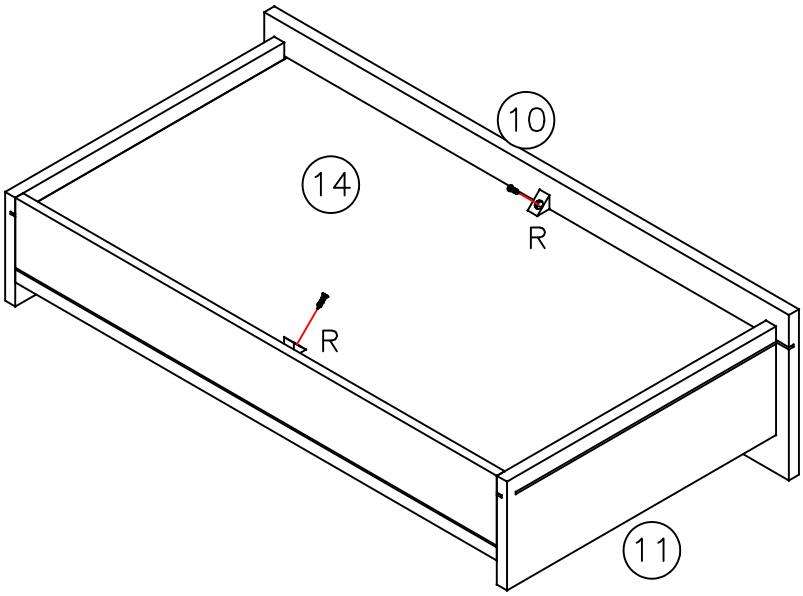

5

Drawer final assembly

This process is repeated twice

O		4
E		8

The underside of the drawer

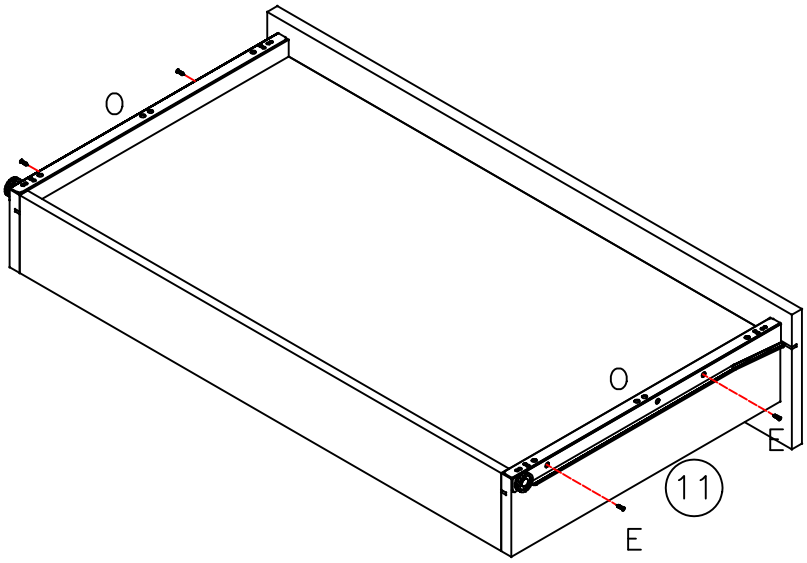

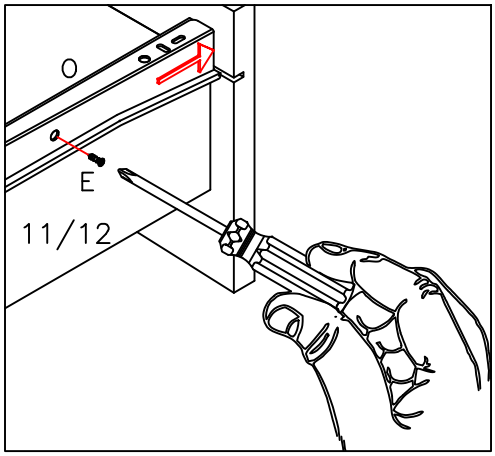

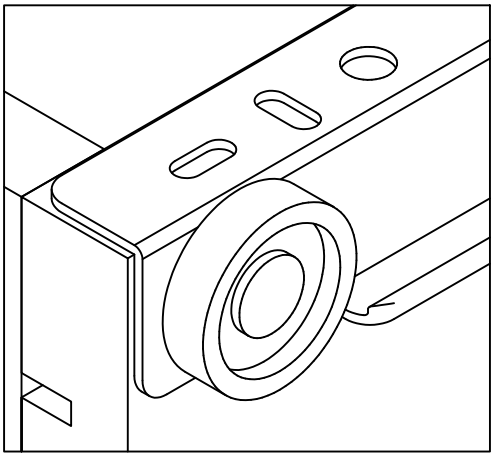

! Please ensure that these screws are complete screwed in. As failure to do so could cause issues when installing the drawer

If you have any further questions regarding the assembly of the drawer, access the website through the QR CODE

6 Preassembly of parts

F		4

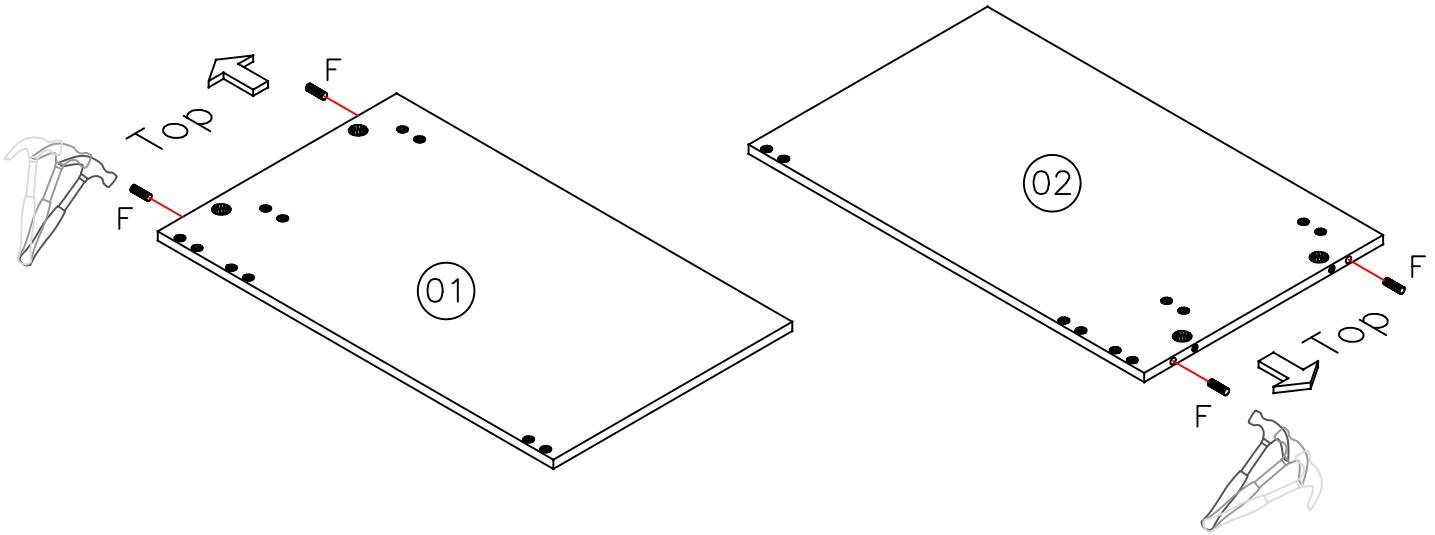

7

F		20

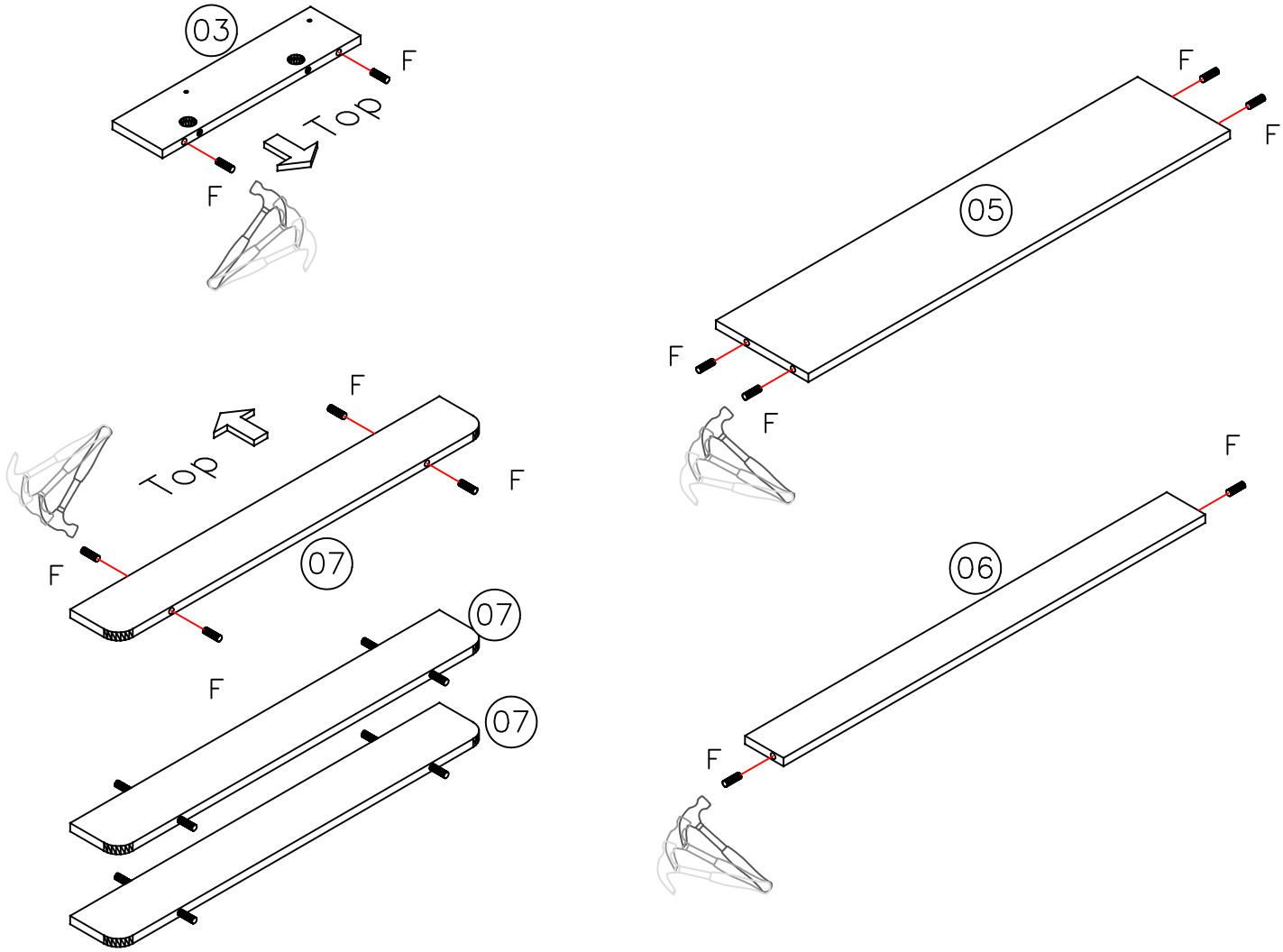

8

F		4

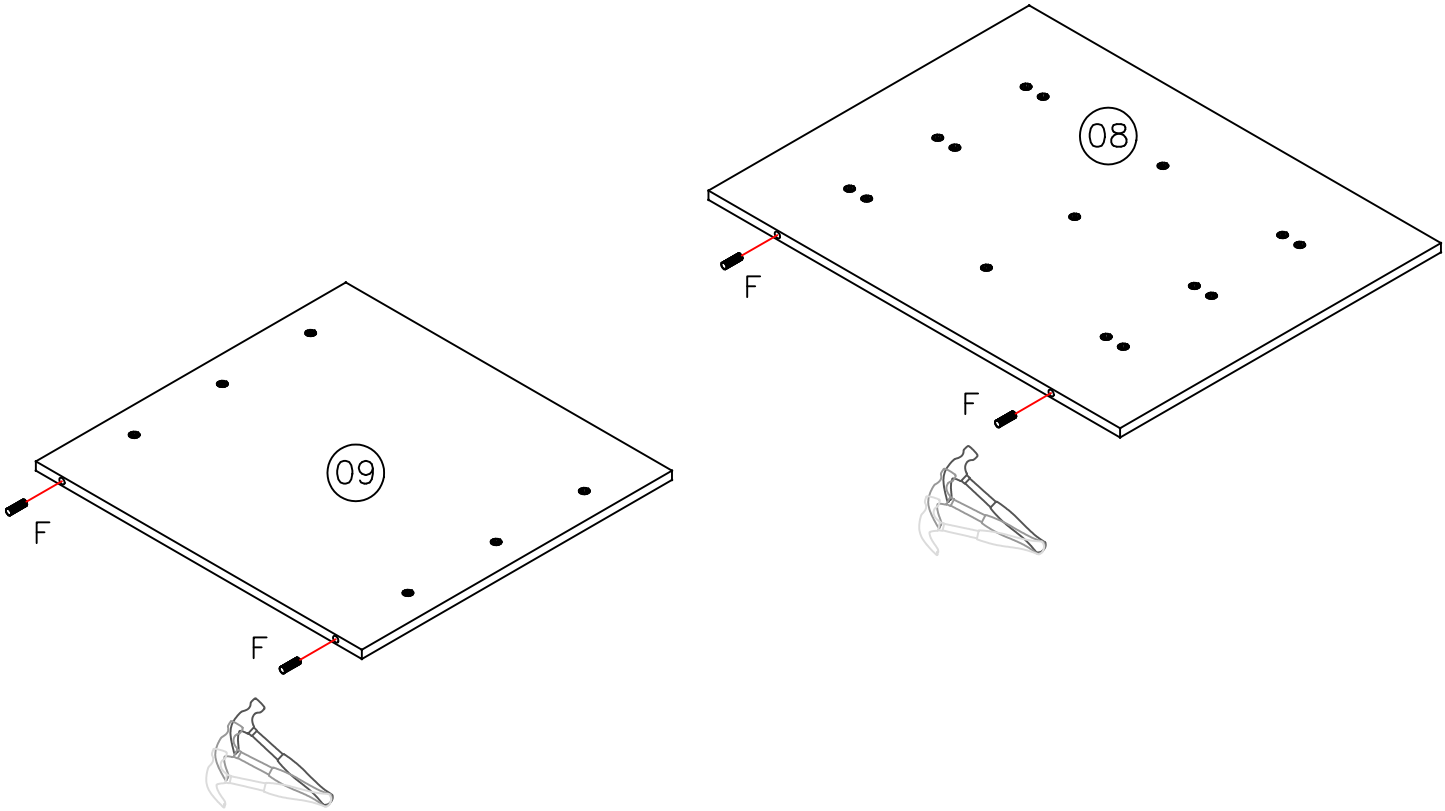

9

E		6
T		6

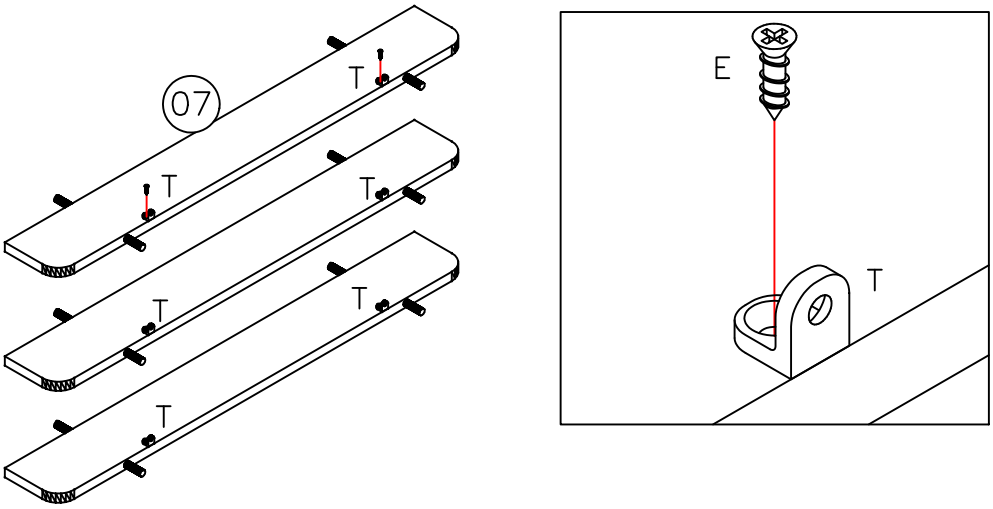

10

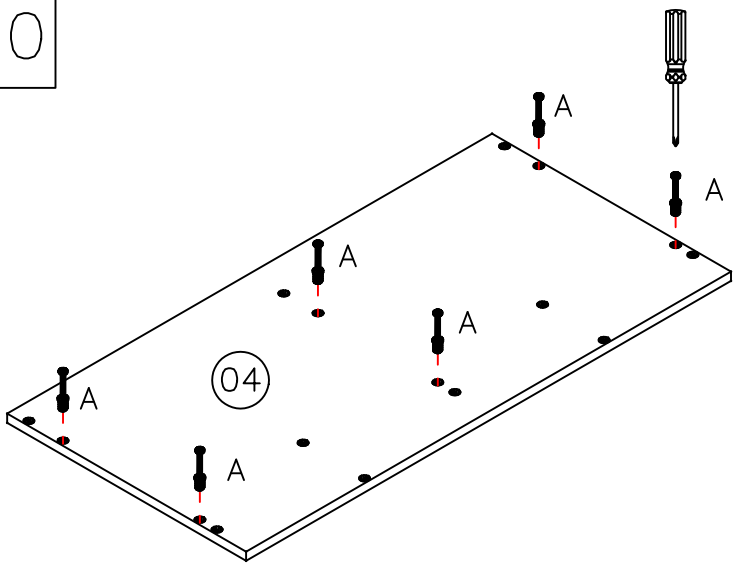
A
A
A
A
A
A
04

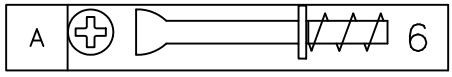
A
6

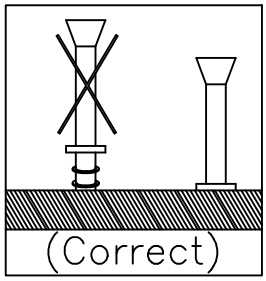
(Correct)

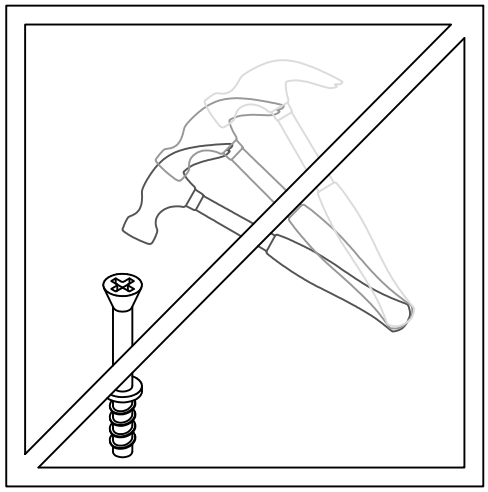

11

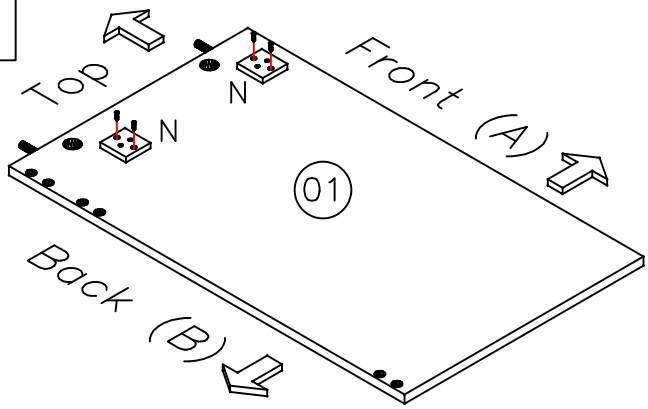
Top
N
N
Front (A)
01
Back (B)

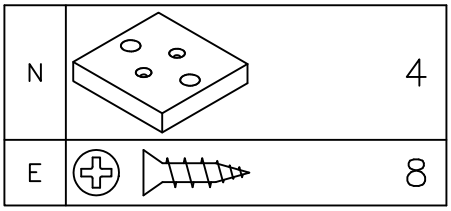
N
4
E
8

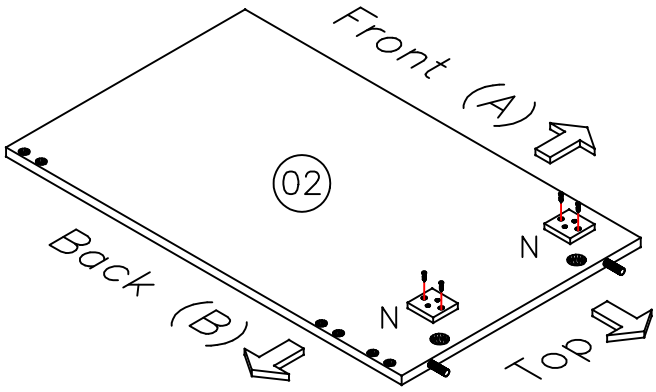
Front (A)
02
Back (B)
N
N
Top

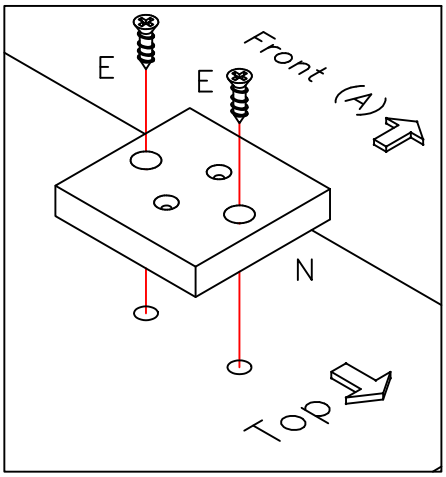
E
E
Front (A)
N
Top

12

O		2
E		4

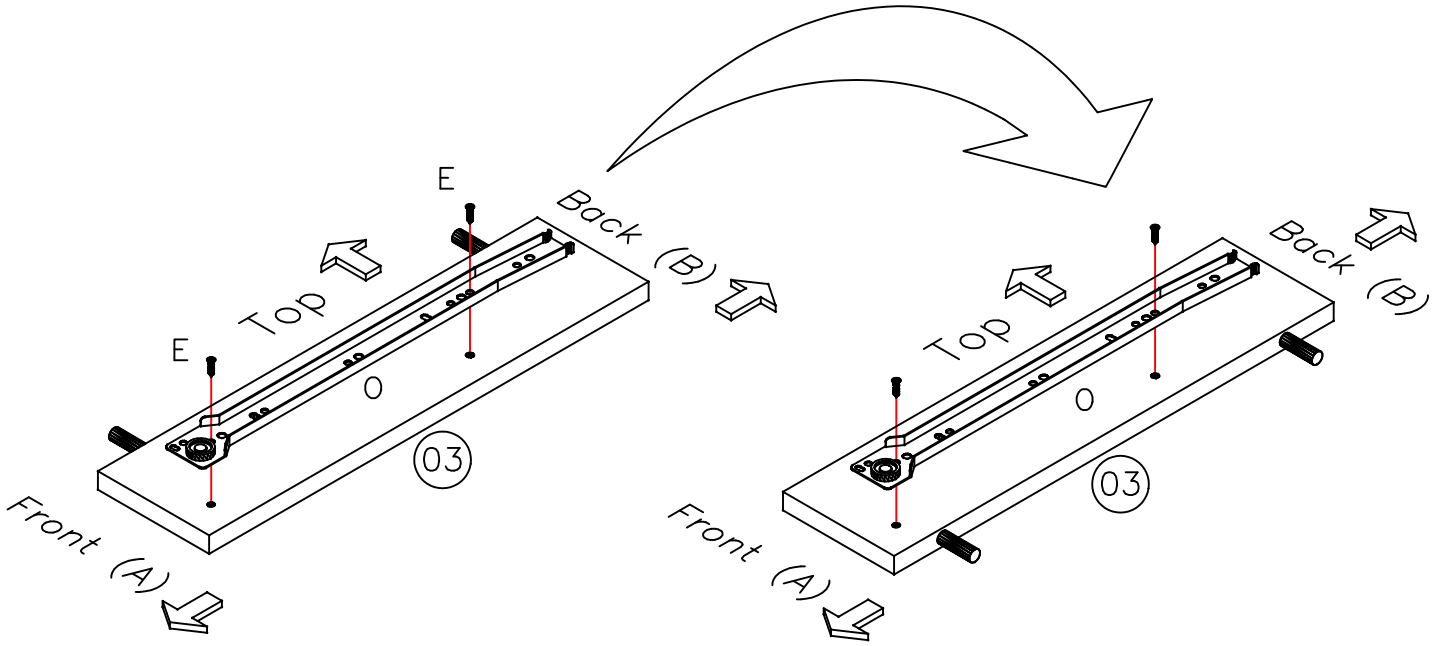
E
E
Top
Back (B)
O
03
Front (A)
Top
Back (B)
O
03
Front (A)

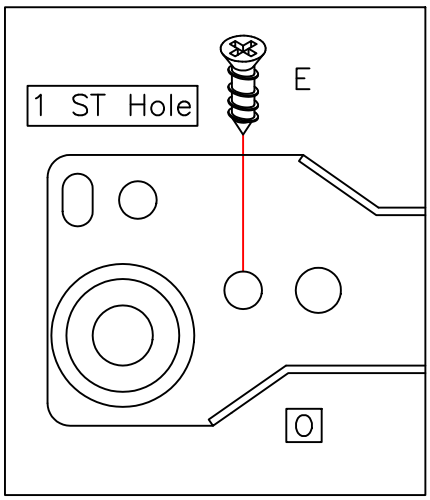
1 ST Hole
E
O

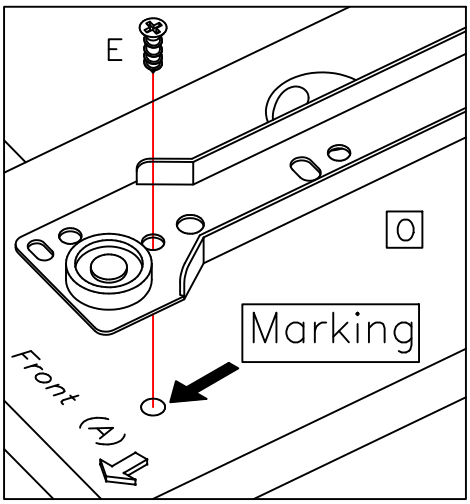
E
O
Marking
Front (A)

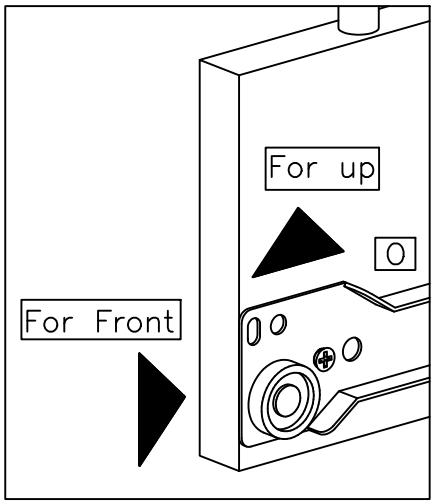
For up
O
For Front

13

O		2
E		4

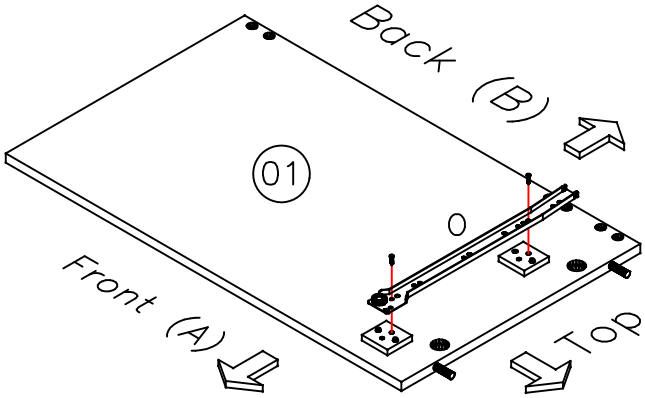

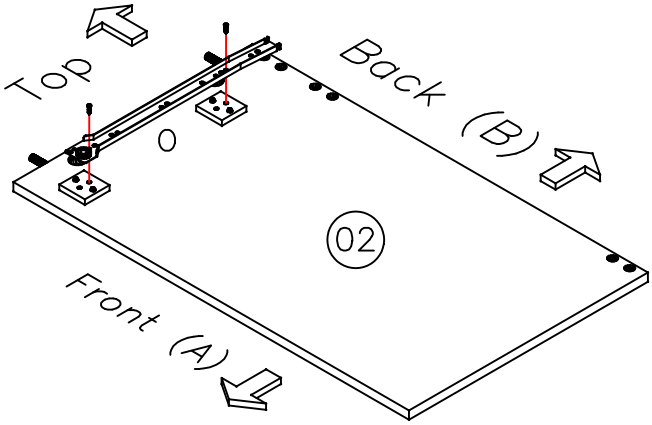

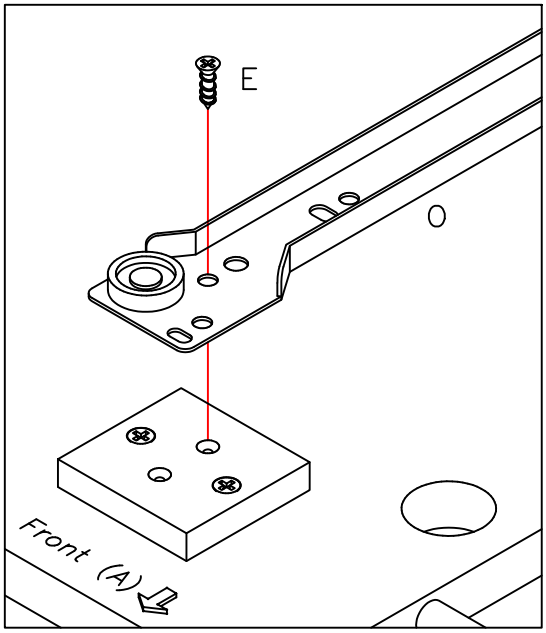

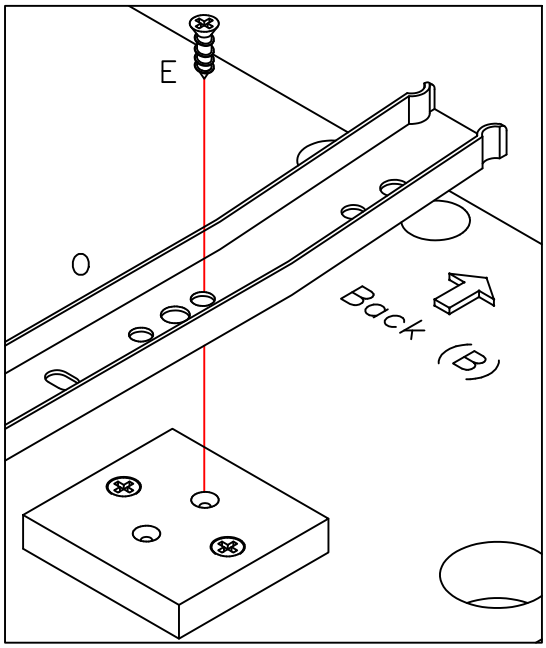

14

E		6

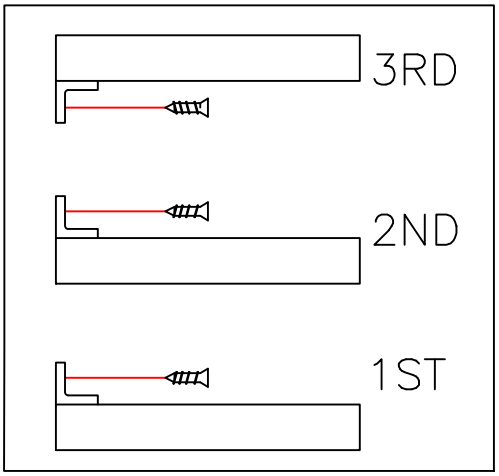

Side view

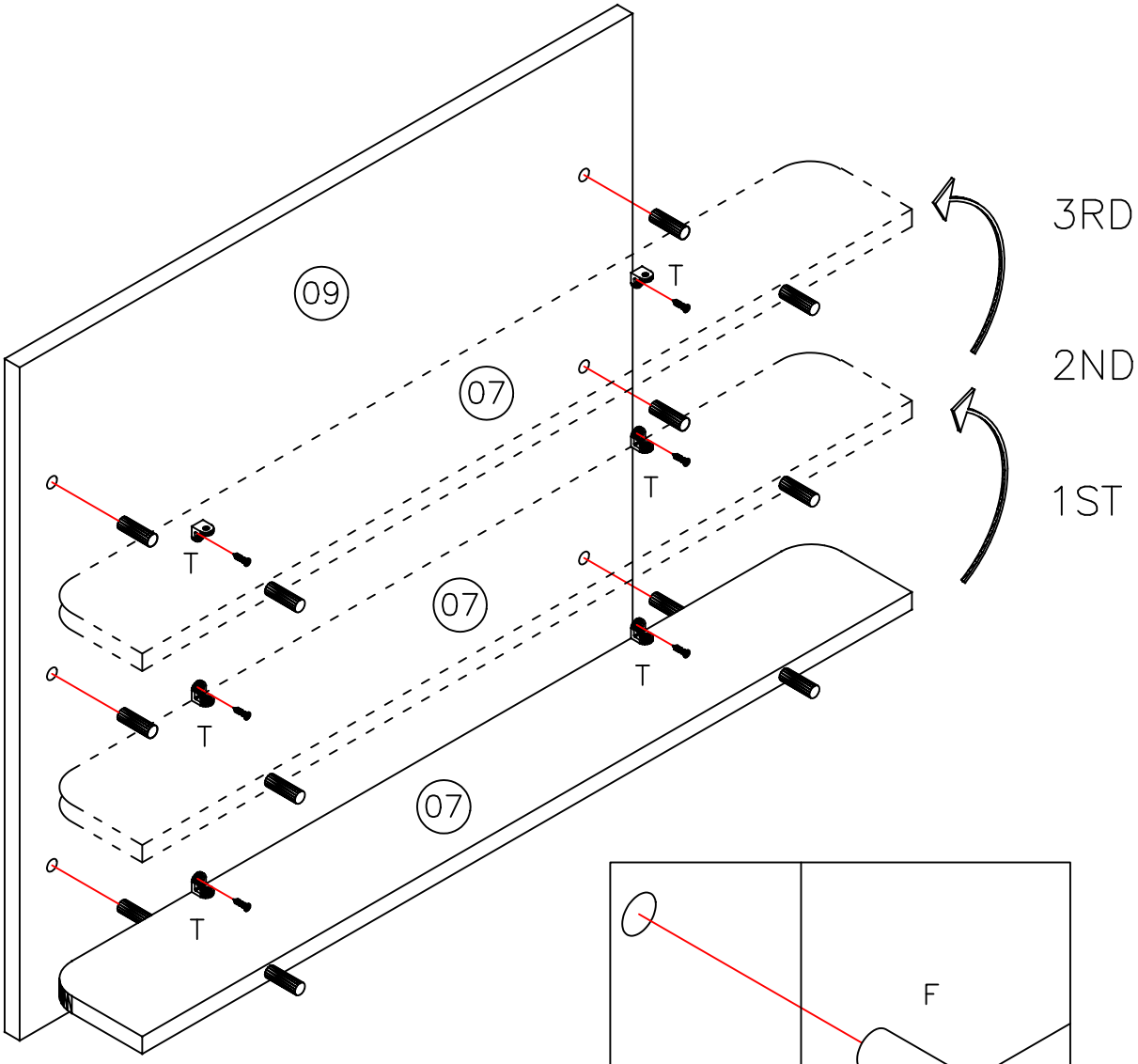

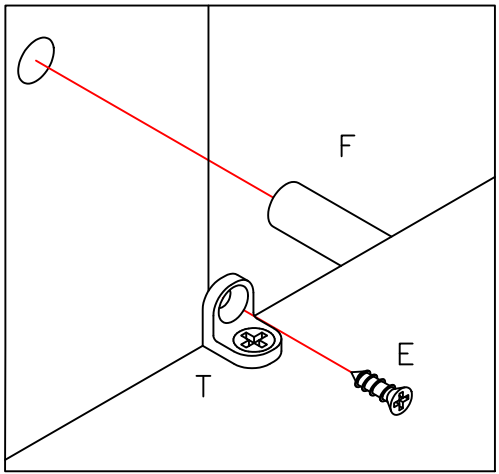

15

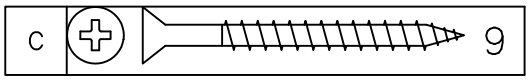

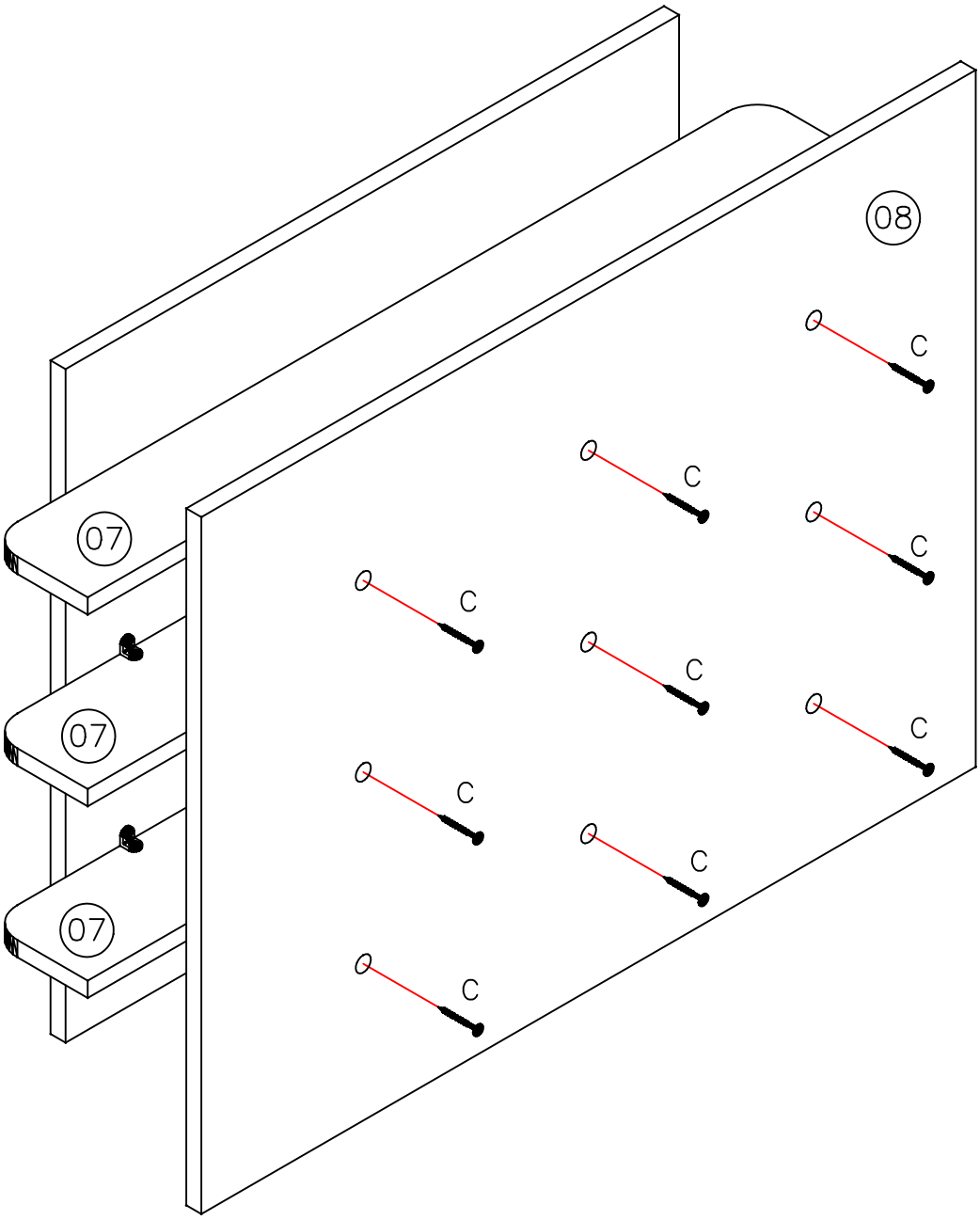

16

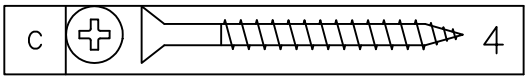

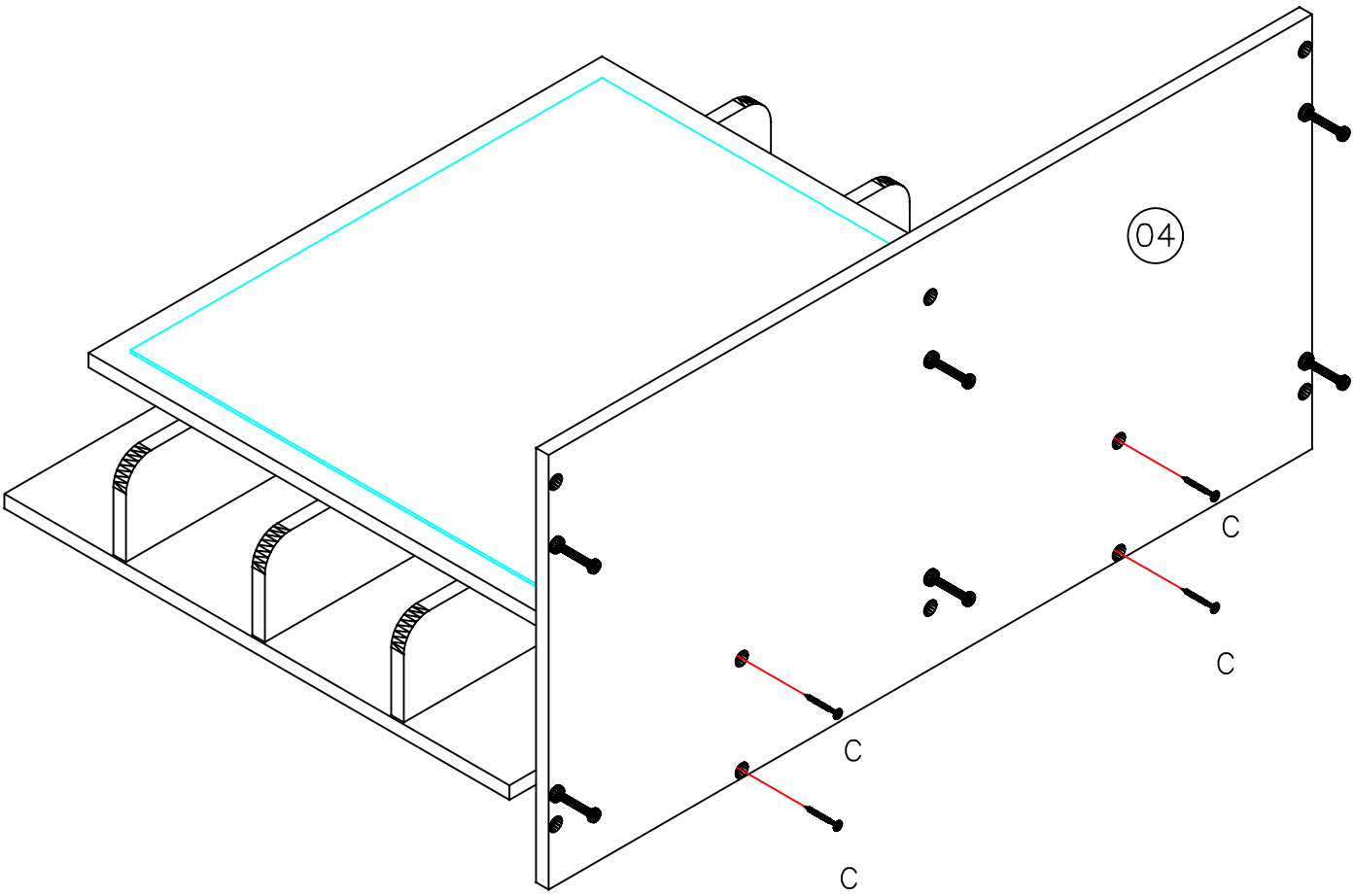

17

C		6
G		4
M		4
Q		6

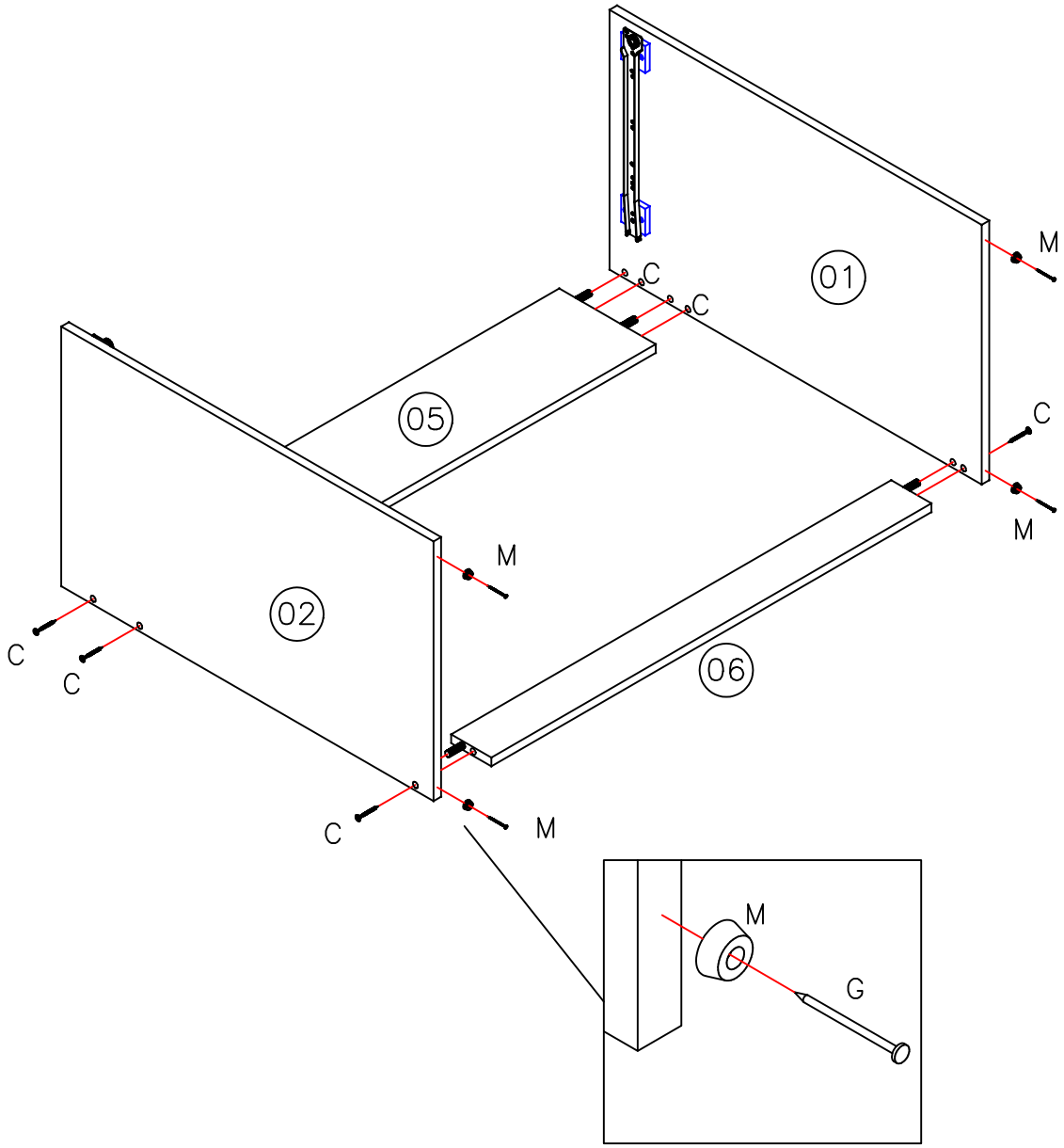

18

B		6
P		6

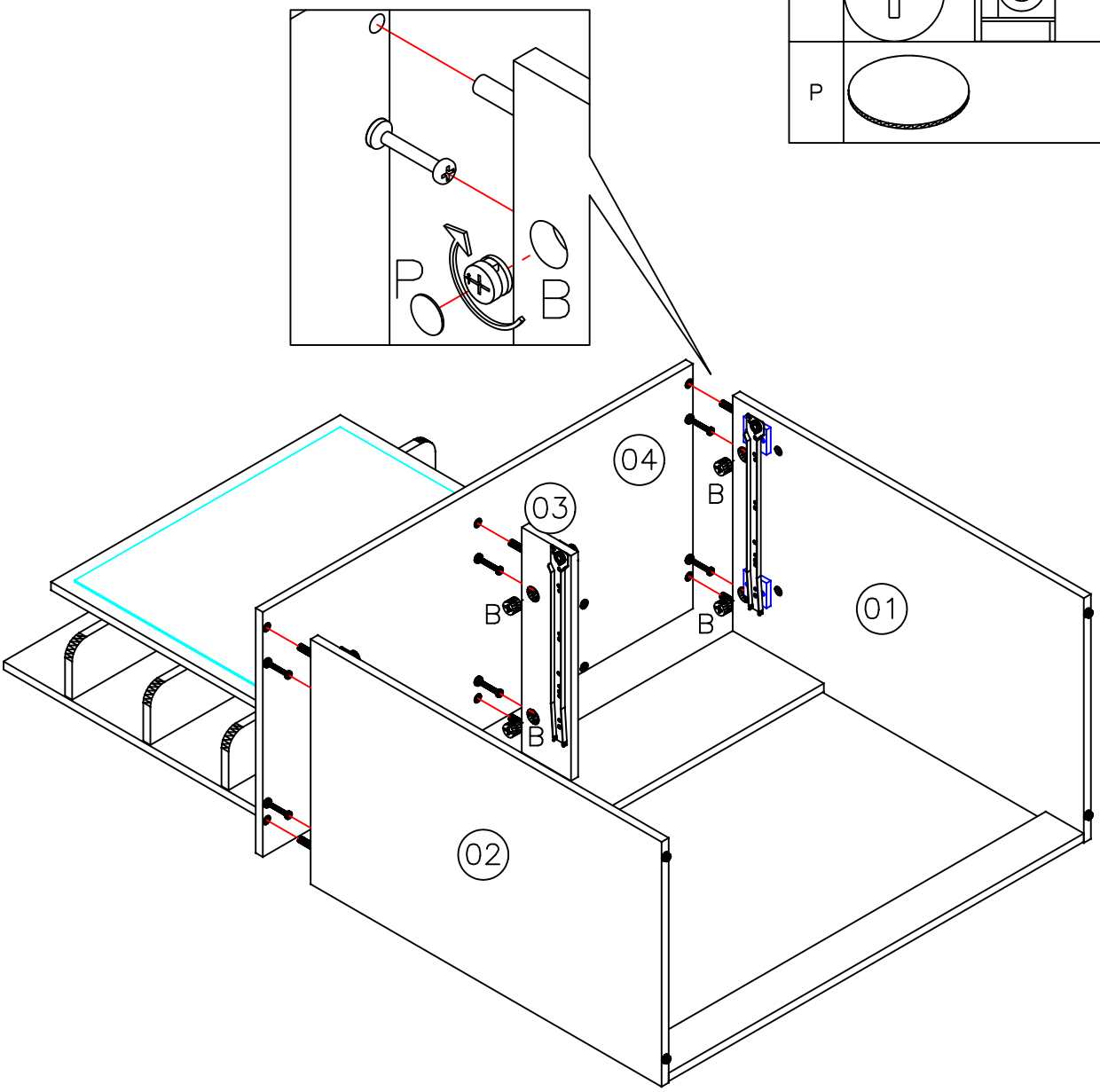

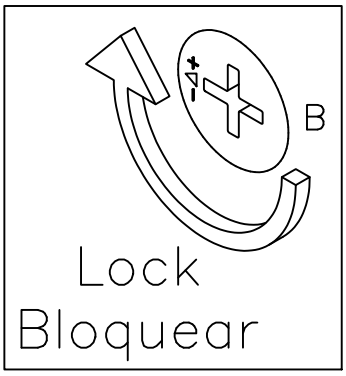

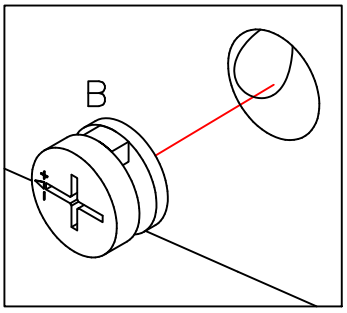

19

NOTE: Do not turn the DRYWALL ANCHOR into a wall stud. If you prefer to fasten the SAFETY ANTI–TIPPING to a wall stud, go to your local hardware store for proper hardware.

Compress the wings of anchor before inserting.

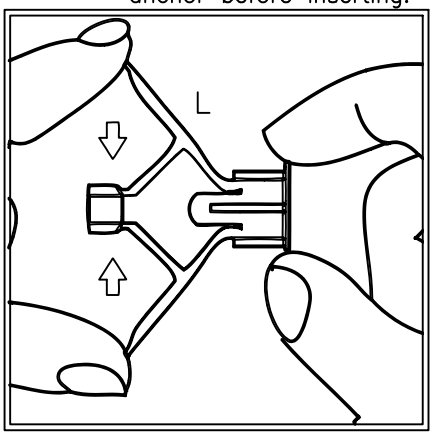

Insert the chuck into the hole of the base material.

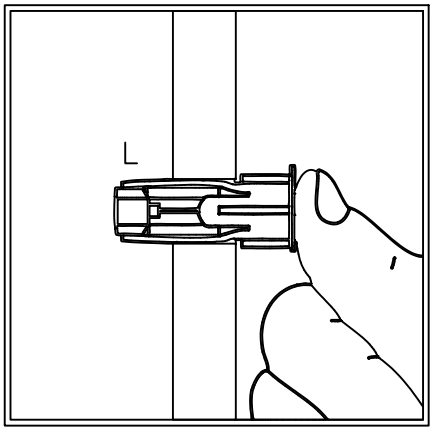

Position the object over the bushing and secure it with a screw.

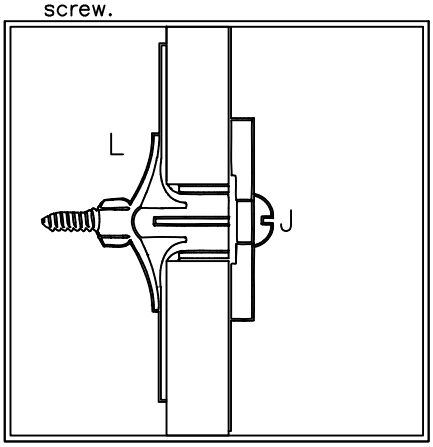

Anti–tipping installation		
H	Mounting bracket	2
I	Clamp	1
J	Screw 4,5x50	2
K	Screw 3,5x16 BC	2
L	Adapter sleeve	2

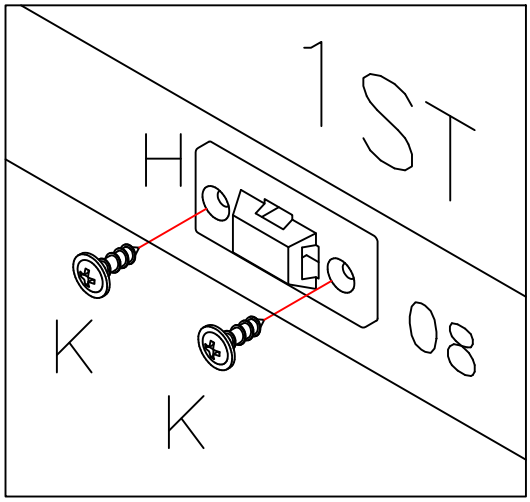

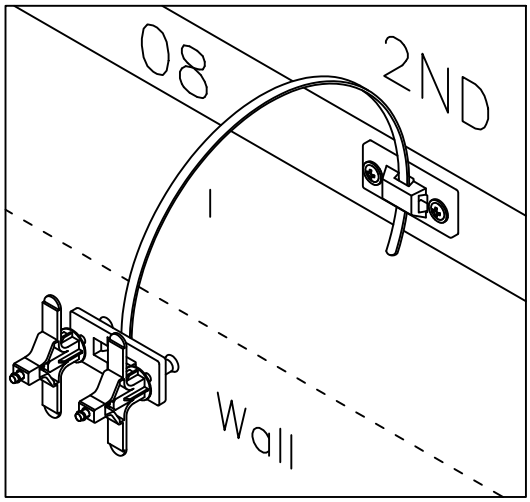

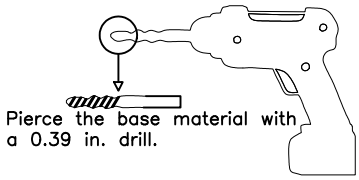

Pierce the base material with a 0.39 in. drill.

Important

- The minimum length of the screw must be the bushing length + object thickness that will be fixed.
- To guarantee the wing expansion function of the bushing, after the screw head is at the object to be fixed, one must continue to rotate the screw until maximum torque is reached.

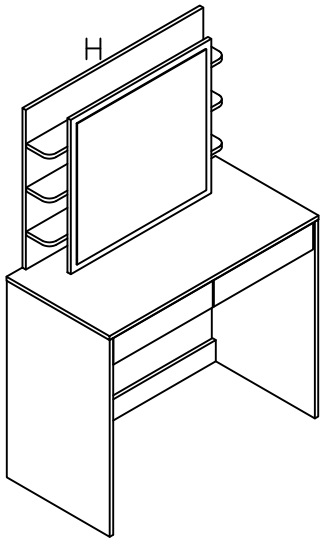

A WARNING –Anti–Tip Advisory

Potential of serious fatal crushing injuries may occur from furniture tip–over. To help prevent tip–over:

ALWAYS INSTALL the tip–over restrain that came with your furniture. This tip–over restrains only reduces but does NOT completely eliminate the risk of tip–over

- ALWAYS Place the heaviest items in the lowest/bottom drawer.
- NEVER place TV's or other heavy objects on top of this product.
- NEVER allow children to scale/climb/hang on the drawers, doors, or shelves.
- NEVER open more than one drawer at a time.

B ADVERTENCIA – Aviso antivuelco

Pueden producirse lesiones graves por aplastamiento mortales debido al vuelco de los muebles. Para ayudar a prevenir vuelcos:

- SIEMPRE INSTALE el sistema de retención que viene con sus muebles. Este sistema antivuelco solo reduce pero NO elimina por complet el riesgo de vuelco.
- SIEMPRE coloque los artículos más pesados en el cajón más bajo /inferior.
- NUNCA coloque televisores u otros objetos pesados encima de este producto.
- NUNCA permita que los niños escalen, trepen o se cuelguen de los cajones, puertas o estantes.
- NUNCA abra más de un cajón a la vez

20
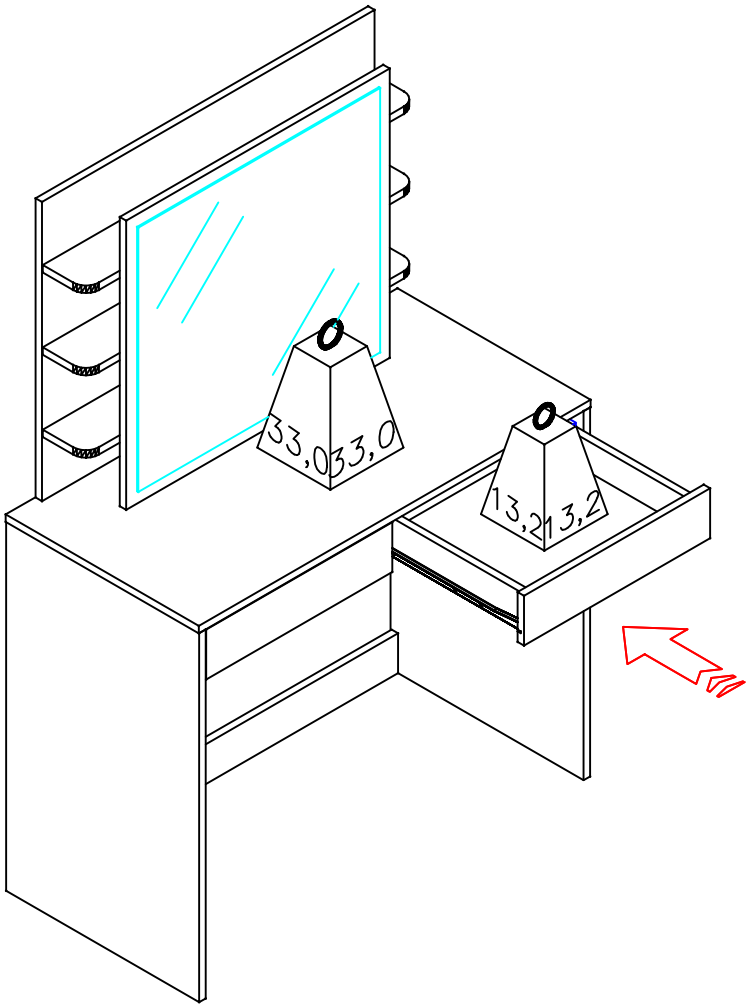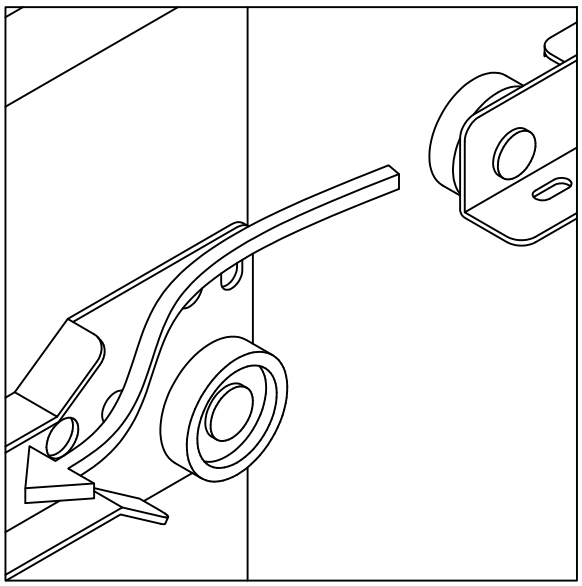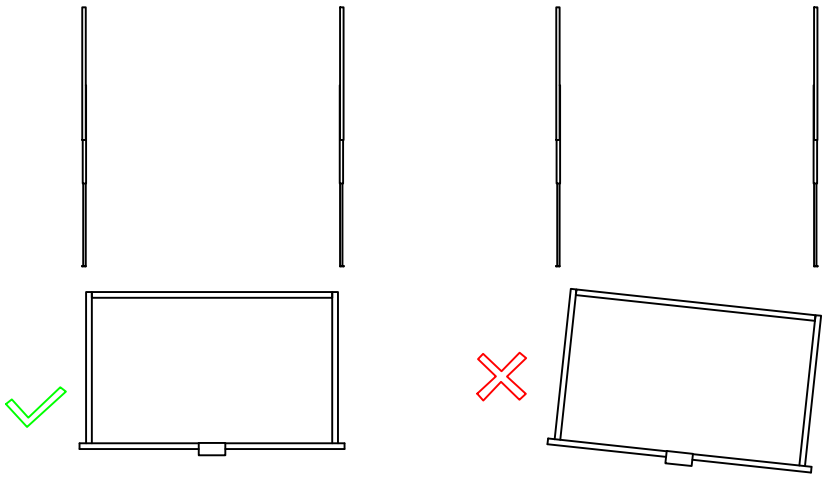
Drawer installation